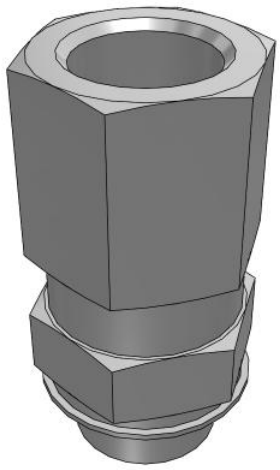

ZP2V, Vacuum Saving Valve
ZP2V-AG1-10

Datasheet

General series information

- Connection thread size for the pad: M5, M6, M8, R1/8, G1/8, NPT1/8
- Fixed orifice size (mm): 0.3, 0.5, 0.7, 1.0
- Maximum operating pressure range (MPa): 0 to 0.7
- Ambient and fluid temperature (°C): 5 to 60 (No freezing)
- Element nominal filtration rating (µm): 40

Standard specifications

Connection thread size for the pad	AG1 (G1/8, Male)
Orifice Size	10 (1.0 mm)
Pressure medium	Air
Maximum temperature of pressure medium	60 °C
Minimum temperature of pressure medium	5 °C (No freezing)
Maximum operating pressure	0.7 MPa
Minimum operating pressure	-100 kPa
Maximum ambient temperature	60 °C
Minimum ambient temperature	5 °C (No freezing)
Pneumatic input connection	Male G 1/8
Pneumatic output connection	Female G 1/8
Flow rate	166 l/min (ANR)
Element nominal filtration rating	40 µm
Weight	0.024 Kg

Specifications are subject to change without prior notice and any obligation on the part of the manufacturer.

SMC United Kingdom +34 945184126 sales@smc.uk

Dimensions

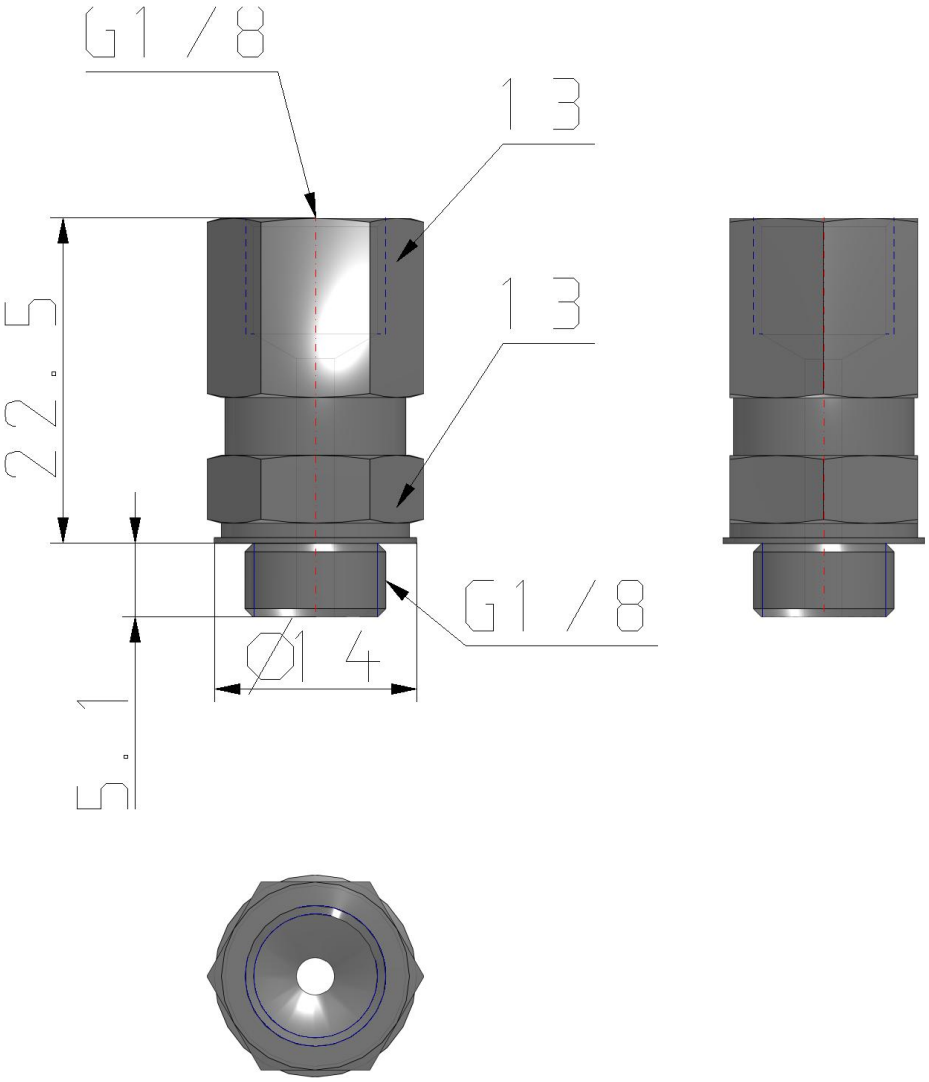

Specifications are subject to change without prior notice and any obligation on the part of the manufacturer.

SMC United Kingdom +34 945184126 sales@smc.uk

Constructions

Construction

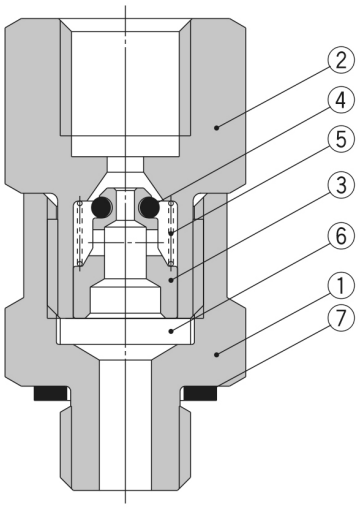

Pad side

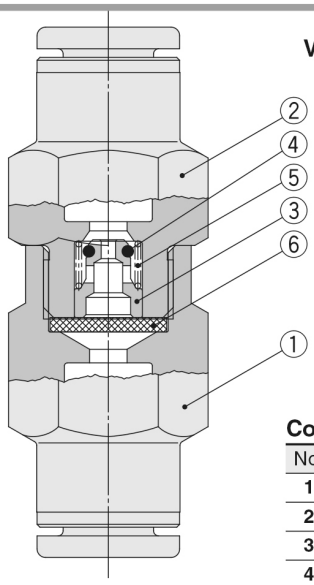

Vacuum generator side

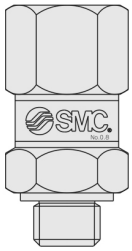

Pad side

Component Parts

No.	Description	Material	Surface treatment
1	**Body A**	Brass	Electroless nickel plating
2	**Body B**	Brass	Electroless nickel plating
3	**Valve**	Aluminum	—
4	**O-ring**	HNBR	—
5	**Spring**	Stainless steel	—
6	**Element**	CAC403 equivalent	—
7	**Gasket**	NBR + Stainless steel	—

Specifications are subject to change without prior notice and any obligation on the part of the manufacturer.

SMC United Kingdom +34 945184126 sales@smc.uk

Additional information

Catalogue ZP2V-B_EU.pdf

Specifications are subject to change without prior notice and any obligation on the part of the manufacturer.

SMC United Kingdom +34 945184126 sales@smc.uk