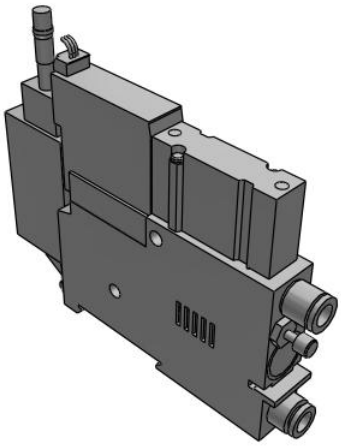

ZK2*A, Vacuum Unit, Ejector System, Single Unit

ZK2A07K5RWA-06

Datasheet

General series information

- Dual 2 port valve (Release valve/Supply valve).
- Efficient 2-stage ejector.
- Pressure sensor / switch variations with energy-saving function available.

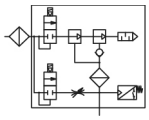

Dual stage modular ejector - with valves and switch

Standard specifications

Body type	A (Single Unit - Silencer Exhaust)
Nominal Nozzle Size	07 (ø0.7)
Supply Valve / Release Valve	K (N.C. / N.C.)
Rated Voltage	5 (24 VDC)
Pressure Sensor/Digital Pressure Switch for Vacuum Spec.	R (Digital Pressure Switch for Vacuum with Energy Saving Function / 100 to -100 kPa / PNP 1 Output / Unit Selection Function)
Supply Valve/Release Valve/Digital Pressure Switch for Vacuum Connector Spec.	W (With Lead Wire for Switch with Energy Saving Function)
Vacuum (V) Port	06 [ø6 One-touch Fitting (Metric)]
Bracket	None
Individual Release Pressure Supply	None
Screwdriver Operation Type Long Lock Nut	None
Vacuum Break Flow Adjustment	None
Exhaust Interference Prevention Valve	None
Pressure medium	Air
Proof pressure	500 kPa
Conform to the European RoHS Directive	Conform
Element nominal filtration rating	30 µm
Repeatability	±0.2 % F.S. ±1 digit
Set pressure range	-105 - 105 kPa

Specifications are subject to change without prior notice and any obligation on the part of the manufacturer.

SMC CORPORATION Zuazobidea 14, 01012, Vitoria-Gasteiz, Álava +34 945184100 +34 945184126 www.smc.eu support.marketingeurope@smc.com

Current consumption	40 mA or less
Applicable fluid	Air
Rated pressure range	-100 - 100 kPa
Power supply voltage	12 to 24 VDC ±10 %, Ripple (p-p) 10 % or less (Protected against reverse connection)
Switch output	PNP open collector OUT1: General purpose, OUT2: Valve control
Supply pressure range (MPa)	0.3 - 0.6 MPa
Noise level	59 dB
Standard supply pressure	0.35 MPa
Maximum vacuum pressure	-91 kPa
Air consumption	24 l/min
Operating temperature range	5 - 50 °C
Vibration resistance	20 m/s²
Impact resistance	100 m/s²
Smallest settable increment	0.1 kPa
Display	3 1/2 digit, 7-segment LED, Colour display (Red)
Display accuracy	±2 % F.S. ±1 digit (Ambient temperature at 25 ±3 °C)
Indicator light	Lights up when output is turned ON. OUT1: Green, OUT2: Red
Insulation resistance	50 MΩ or more (500 VDC measured via megohmmeter) between terminals and housing
Switch output Max. applied voltage	26.4 VDC
Valve type of actuation	Supply valve: N.C. Release valve: N.C.
Valve configuration	Pilot operated dual 2-port
Valve operating pressure range	0.3 - 0.6 MPa
Valve construction	Popper seal
Valve rated voltage	24 VDC
Valve power consumption	0.4 W
Valve lead wire (ZK2-LV**-A)	Cross section: 0.2 mm² (AWG24) Insulator O.D.: 1.4 mm
Suction filter, Filtration area	510 mm²
Switch output max. load current	80 mA
Switch output residual voltage	2 V or less (at load current of 80 mA)
Switch output response time	2.5 ms or less (with anti-chattering function: 20, 100, 500, 1000, 2000 ms)
Switch output short circuit protection	Yes
Hysteresis	Variable from 0
Switch temperature range	5 - 50 °C
Switch withstand voltage	1000 VAC for 1 minute between terminals and housing
Switch temperature characteristics	±2 % F.S. (at 25 °C in an operating temperature range of 5 and 50 °C)
Switch lead wire	Cable: 5 cores Ø 3.5, 2 m Cross section: 0.15 mm² (AWG26) Insulator O.D.: 1.0 mm
Max. suction flow, Silencer exhaust/Complex exhaust	29 l/min
Enclosure	IP40
Weight	0.109 Kg

Specifications are subject to change without prior notice and any obligation on the part of the manufacturer.

SMC CORPORATION Zuazobidea 14, 01012, Vitoria-Gasteiz, Álava +34 945184100 +34 945184126 www.smc.eu support.marketingeurope@smc.com

Dimensions

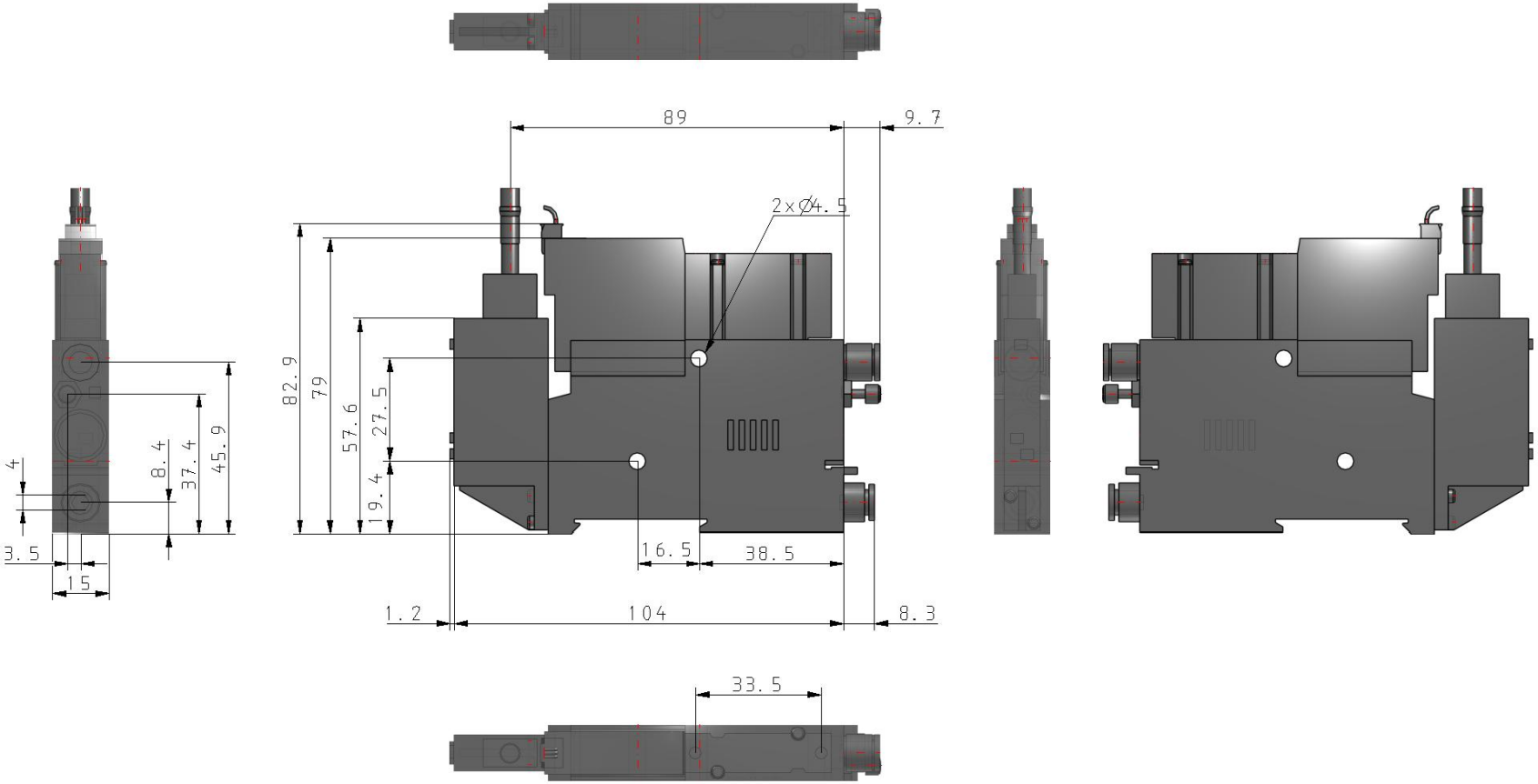

Specifications are subject to change without prior notice and any obligation on the part of the manufacturer.

SMC CORPORATION Zuazobidea 14, 01012, Vitoria-Gasteiz, Álava +34 945184100 +34 945184126 www.smc.eu support.marketingeurope@smc.com

Constructions

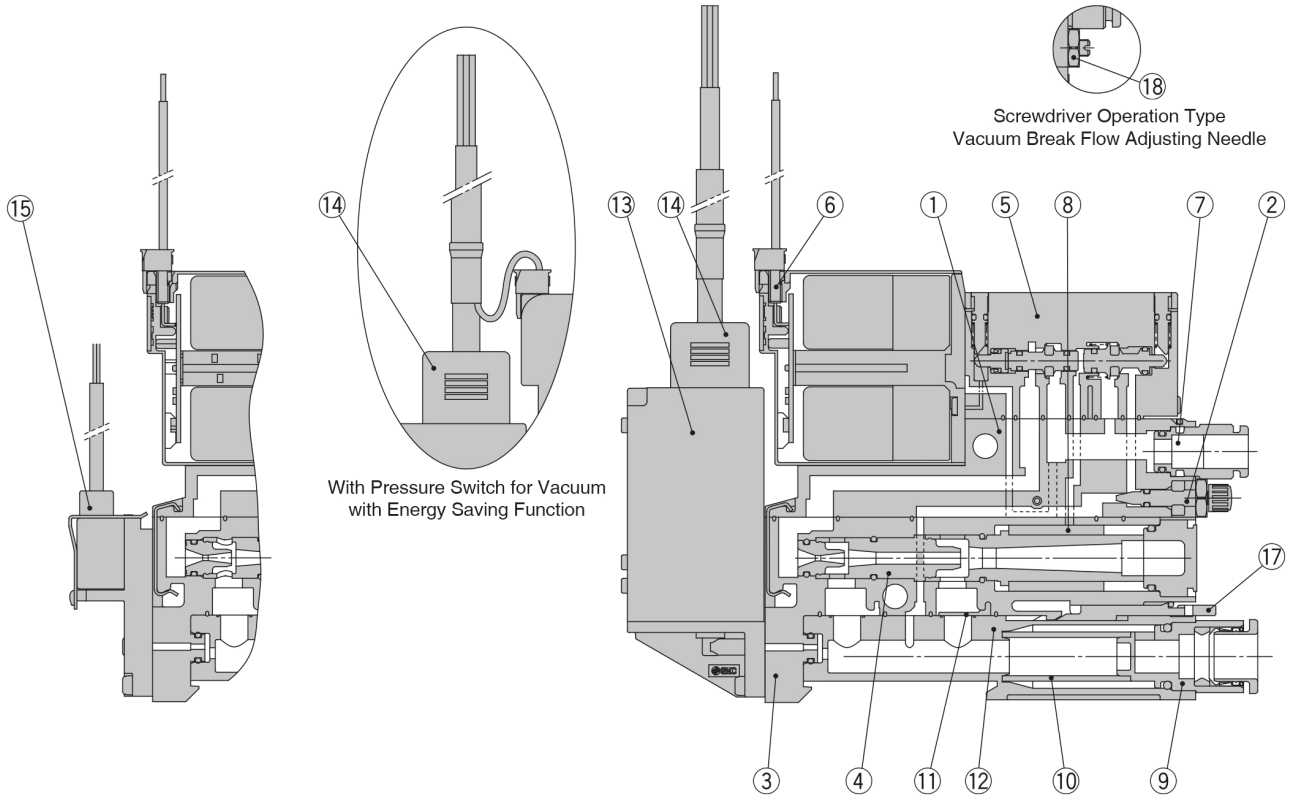

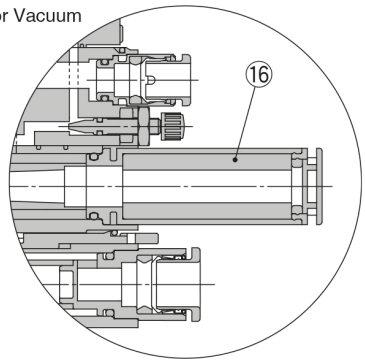

With High-noise Reduction Silencer

Component Parts

No.	Description	Material	Note
1	**Valve body assembly**	PBT	HNBR, NBR and steel are also used.
2	**Needle assembly**	Brass	Electroless nickel plated brass, resin, steel and NBR are used.
3	**Ejector body assembly**	PBT	HNBR, NBR and steel are also used.
4	**Ejector assembly**	PBT	NBR is also used.

Replacement Parts

No.	Description	Note
5	**Valve assembly**	—
6	**Connector assembly**	Connector for solenoid valve 3 wire (For valve type K/R), 2 wire (For valve type J)
7	**One-touch fitting assembly**	Metric size: Ø 6, Inch size: Ø 1/4"
8	**Sound absorbing material**	10 pcs. per set
9	**Vacuum port adapter assembly**	With One-touch fitting and filter element
10	**Filter element**	Nominal filtration rating: 30 μm, 10 pcs. per set
11	**Body gasket**	Gasket integrated with the exhaust interference prevention valve, 10 pcs. per set
12	**Filter case**	Case body: Polycarbonate (Refer to the Specific Product Precautions on page 47.) Clear filter case: without a port for the pressure switch or sensor, Opaque filter case: with a port for the pressure switch or sensor
13	**Vacuum pressure switch assembly**	With 2 screws and 1 gasket
14	**Lead wire with connector**	—
15	**Pressure sensor assembly**	With 2 screws and 1 gasket
16	**High-noise reduction silencer case assembly**	With sound absorbing material (Part number: ZK2-SE4-6-A)
17	**Release lever**	10 pcs. per set
18	**Lock nut**	10 pcs. per set

Specifications are subject to change without prior notice and any obligation on the part of the manufacturer.

SMC CORPORATION Zuazobidea 14, 01012, Vitoria-Gasteiz, Álava +34 945184100 +34 945184126 www.smc.eu support.marketingeurope@smc.com

Additional information

Catalogue	ZK2A-C_EU.pdf
Declaration of conformity	newDoC_ZK2-A_TF1Z208EN.pdf newDoC_ZK2-A_TF124-124EN.pdf
Installation manuals	IM_ZK2-A_TF2Z368EN-B.pdf
Operation manuals	OM_ZK2-ZSV-A_OM00501EN-C.pdf OM_ZK2xA_OM01301EN-A.pdf

Specifications are subject to change without prior notice and any obligation on the part of the manufacturer.

SMC CORPORATION Zuazobidea 14, 01012, Vitoria-Gasteiz, Álava +34 945184100 +34 945184126 www.smc.eu support.marketingeurope@smc.com