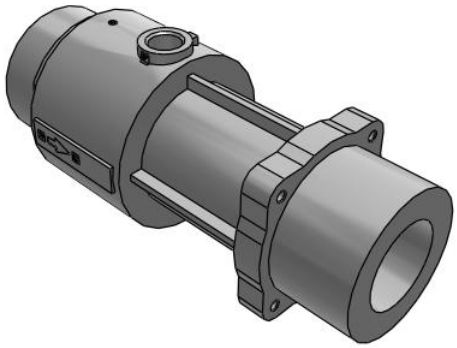

ZHV, Vacuum Flow
ZHV30-F

Datasheet

General series information

- Discharge flow rate up to 6820 l/min
- Suction flow rate up to 5270 l/min. with a vacuum pressure of -6 kPa
- Fluid passage diameters [mm]: Ø 13, Ø 21.6, Ø 30 and Ø 42
- Possibility to adjust the suction and discharge flow rate
- Compact and lightweight design
- Air-driven, maintenance-free.

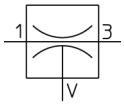

Vacuum ejector

Standard specifications

Passage Diameter	30 (ø30)
SUP Port Thread	F (G)
Accessory	None
Maximum ambient temperature	80 ºC
Minimum ambient temperature	-5 ºC (no freezing)
Conform to the European RoHS Directive	Conform
Material	Aluminium die-cast
Applicable fluid	Air
Supply pressure range (MPa)	0~0.7 MPa
Air consumption	710 l/min
Maximum suction flow rate	4590 l/min
Max. Discharge Flow rate	5310 l/min
Supply vacuum pressure	-6 kPa
Passage diameter	30 mm
Seal material	NBR
Bracket material	Steel
Hose band material	Stainless steel

Specifications are subject to change without prior notice and any obligation on the part of the manufacturer.

SMC CORPORATION Zuazobidea 14, 01012, Vitoria-Gasteiz, Álava +34 945184100 +34 945184126 www.smc.eu emcmarketing@smc.smces.es

Dust bag material	Polyester
Dust bag filtration	10 µm
Weight	0.526 Kg

Specifications are subject to change without prior notice and any obligation on the part of the manufacturer.

SMC CORPORATION Zuazobidea 14, 01012, Vitoria-Gasteiz, Álava +34 945184100 +34 945184126 www.smc.eu emcmarketing@smc.smces.es

Dimensions

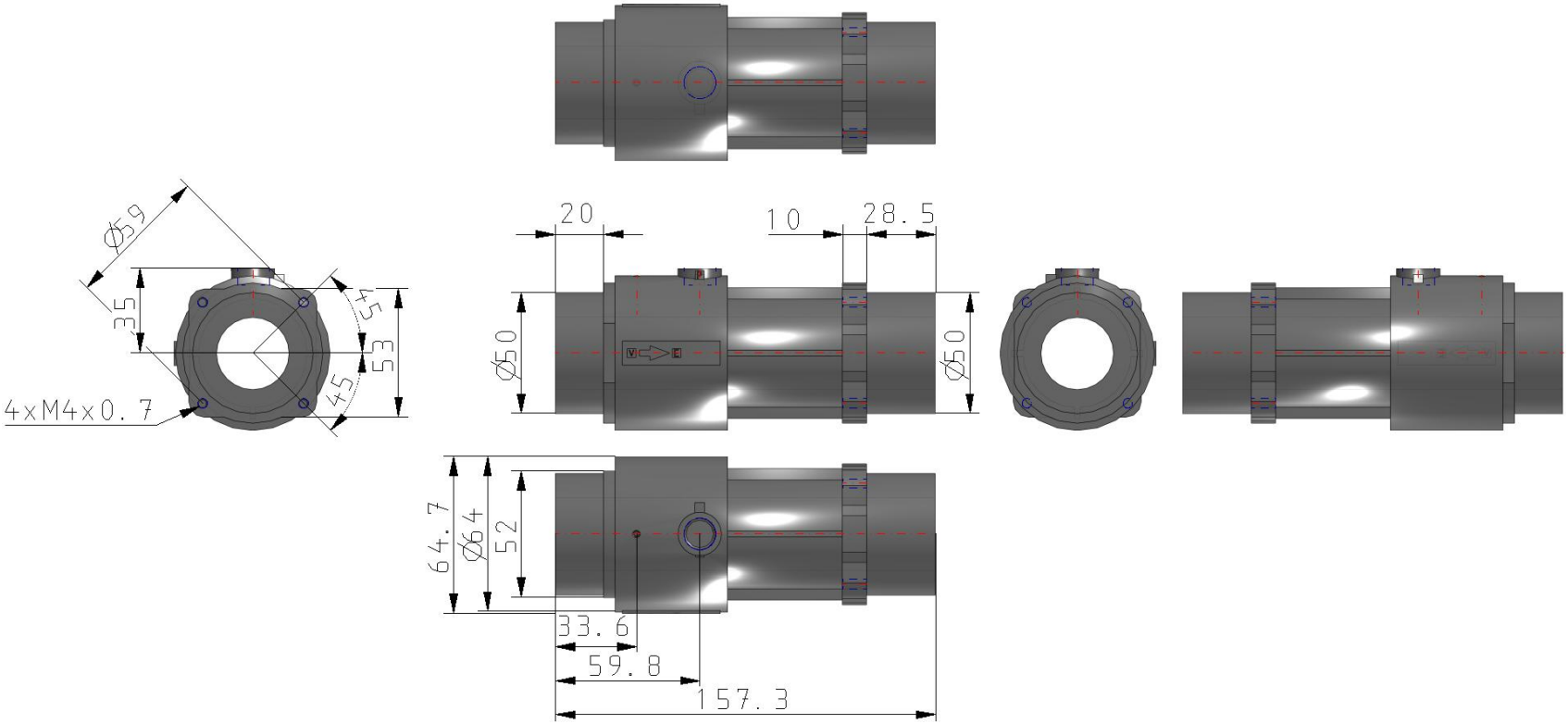

Specifications are subject to change without prior notice and any obligation on the part of the manufacturer.

SMC CORPORATION Zuazobidea 14, 01012, Vitoria-Gasteiz, Álava +34 945184100 +34 945184126 www.smc.eu emcmarketing@smc.smces.es

Constructions

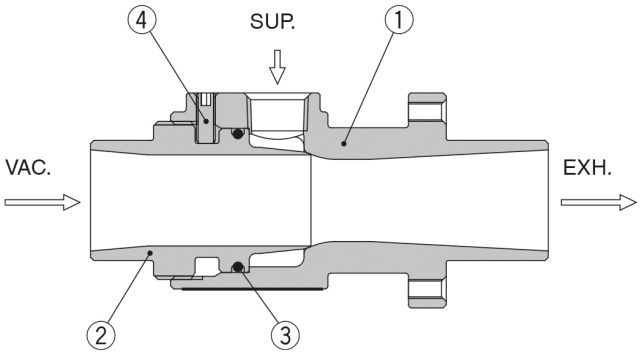

No.	Description	Material	Note
1	**Body**	Aluminium die-cast	Silver
2	**Nozzle**	Aluminium die-cast	Silver
3	**O-ring**	NBR	Grease applied
4	**Hexagon socket set screw**	Steel	

Specifications are subject to change without prior notice and any obligation on the part of the manufacturer.

SMC CORPORATION Zuazobidea 14, 01012, Vitoria-Gasteiz, Álava +34 945184100 +34 945184126 www.smc.eu emcmarketing@smc.smces.es

Additional information

Catalogue ZHV-A_EU.pdf

Specifications are subject to change without prior notice and any obligation on the part of the manufacturer.

SMC CORPORATION Zuazobidea 14, 01012, Vitoria-Gasteiz, Álava +34 945184100 +34 945184126 www.smc.eu emcmarketing@smc.smces.es