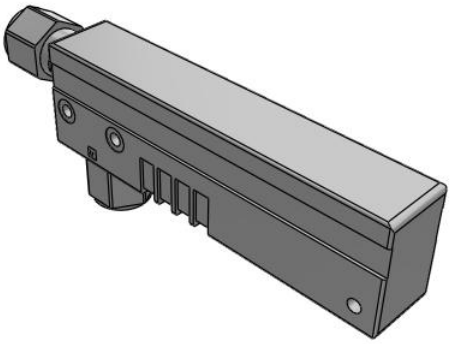

# ZH-A, Vacuum Ejector, Box Style/Body Ported Style, Metric

## ZH18BSA-F03-F03

Datasheet

## General series information

- One-touch fittings: Ø 6, 8, 10 and 12 mm. Screw-in connections: 1/8" to 1/2" (Rc/G).

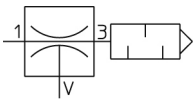


*Vacuum ejector, with built-in silencer*

## Standard specifications

| | |
|---|---|
| Nozzle Diameter | 18 (Ø 1.8 mm) |
| Model | B (Box Style) |
| Vacuum Pressure | S [-90 kPa; -89 kPa (Box Style)] |
| Port SUP. | F03 (G 3/8) |
| Port VAC. | F03 (G 3/8) |
| Port EXH. | None |
| Accessories | W/ Bracket - W/o Silencer (or None in the Case of Box Style) |
| Pressure medium | Air |
| Maximum temperature of pressure medium | 50 ºC |
| Minimum temperature of pressure medium | -5 ºC |
| Maximum ambient temperature | 50 ºC |
| Minimum ambient temperature | -5 ºC |
| Pneumatic input connection | Screw-in G 3/8 |
| Flow rate | 76 l/min (ANR) |
| Usable tubing material | Nylon;Polyurethane;Soft nylon |
| Pneumatic vacuum connection | Screw-in G 3/8 |
| Maximum Vacuum | -90 kPa |
| Nozzle nominal size [mm] | 1.8 mm |
| Weight | 0.094 Kg |

*Specifications are subject to change without prior notice and any obligation on the part of the manufacturer.*



**SMC CORPORATION** Zuazobidea 14, 01012, Vitoria-Gasteiz, Álava +34 945184100 +34 945184126 www.smc.eu emcmarketing@smc.smces.es

# Dimensions

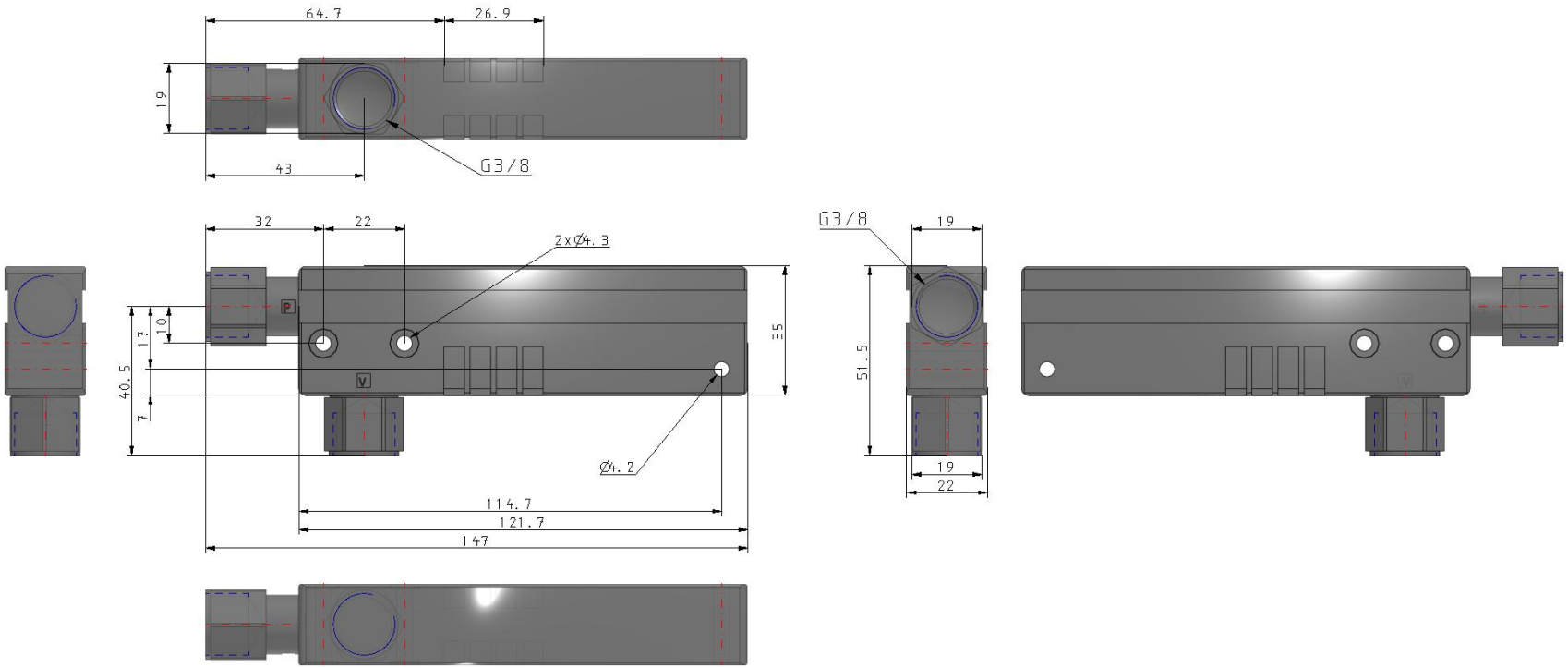


Specifications are subject to change without prior notice and any obligation on the part of the manufacturer.



**SMC CORPORATION** Zuazobidea 14, 01012, Vitoria-Gasteiz, Álava +34 945184100 +34 945184126 www.smc.eu emcmarketing@smc.smces.es

## Constructions

# Box type

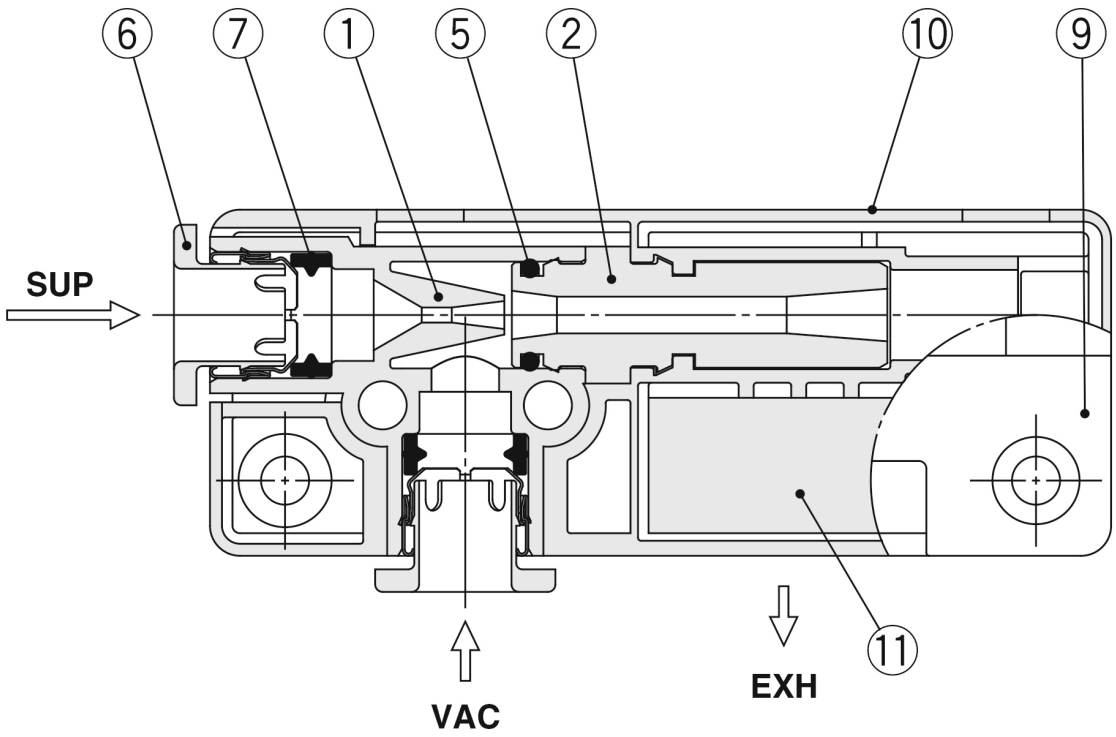


## Component Parts

| No. | Description | Material | Note |
|---|---|---|---|
| 1 | **Body** | PBT | |
| 2 | **Diffuser** | PPS | Type S: Brown, Type L: Black |
| 5 | **O-ring** | NBR | Grease applied |
| 6 | **Cassette** | — | |
| 7 | **Seal** | NBR | Grease applied |
| 9 | **Cover A** | PBT | |
| 10 | **Cover B** | PBT | With identification mark for type S or type L (Refer to page 23 for details.) |
| 11 | **Sound absorbing material** | Resin | |

Specifications are subject to change without prior notice and any obligation on the part of the manufacturer.



SMC CORPORATION Zuazobidea 14, 01012, Vitoria-Gasteiz, Álava +34 945184100 +34 945184126 www.smc.eu emcmarketing@smc.smces.es

## Additional information

| | |
|---|---|
| Catalogue | ZH-C_EU.pdf |
| Operation manuals | OM_ZH_OM00401EN-B.pdf |

Specifications are subject to change without prior notice and any obligation on the part of the manufacturer.



SMC CORPORATION Zuazobidea 14, 01012, Vitoria-Gasteiz, Álava +34 945184100 +34 945184126 www.smc.eu emcmarketing@smc.smces.es