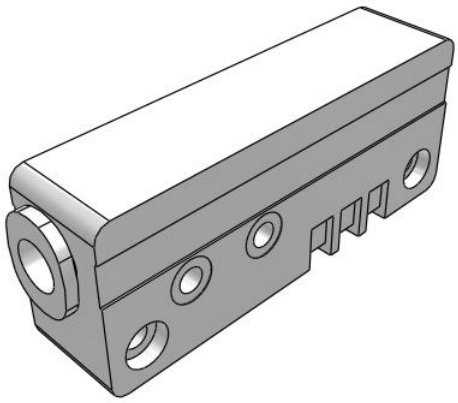

ZH-A, Vacuum Ejector, Box Style/Body Ported Style, Metric

ZH07BLA-06-06

Datasheet

General series information

- One-touch fittings: Ø 6, 8, 10 and 12 mm. Screw-in connections: 1/8" to 1/2" (Rc/G).

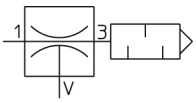

Vacuum ejector, with built-in silencer

Standard specifications

Nozzle Diameter	07 (Ø 0.7 mm)
Model	B (Box Style)
Vacuum Pressure	L (-48 kPa [ZH05 to 13]; -66 kPa [ZH15 to 20])
Port SUP.	06 (One-touch Fitting Ø6 mm)
Port VAC.	06 (One-touch Fitting Ø6)
Port EXH.	None
Accessories	W/ Bracket - W/o Silencer (or None in the Case of Box Style)
Pressure medium	Air
Maximum temperature of pressure medium	50 ºC
Minimum temperature of pressure medium	-5 ºC
Maximum ambient temperature	50 ºC
Minimum ambient temperature	-5 ºC
Pneumatic input connection	One-touch Ø 6
Flow rate	28 l/min (ANR)
Usable tubing material	Nylon;Polyurethane;Soft nylon
Pneumatic vacuum connection	One-touch Ø 6
Maximum Vacuum	-48 kPa
Nozzle nominal size [mm]	0.7 mm
Weight	0.013 Kg

Specifications are subject to change without prior notice and any obligation on the part of the manufacturer.

SMC CORPORATION Zuazobidea 14, 01012, Vitoria-Gasteiz, Álava +34 945184100 +34 945184126 www.smc.eu emcmarketing@smc.smces.es

Dimensions

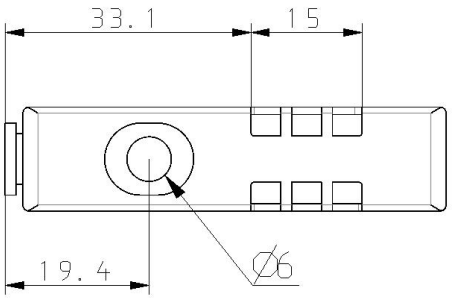

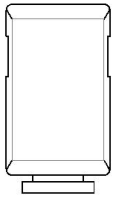

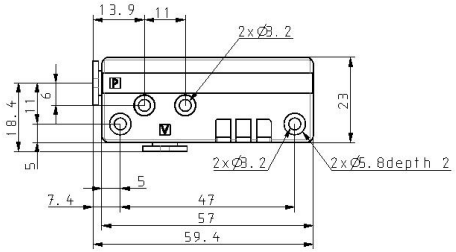

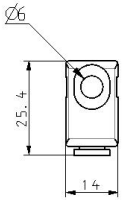

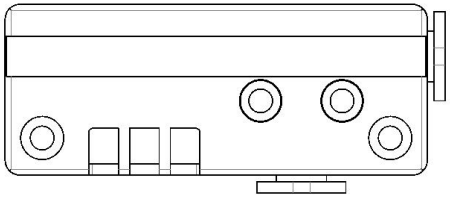

Specifications are subject to change without prior notice and any obligation on the part of the manufacturer.

SMC CORPORATION Zuazobidea 14, 01012, Vitoria-Gasteiz, Álava +34 945184100 +34 945184126 www.smc.eu emcmarketing@smc.smces.es

Constructions

Box type

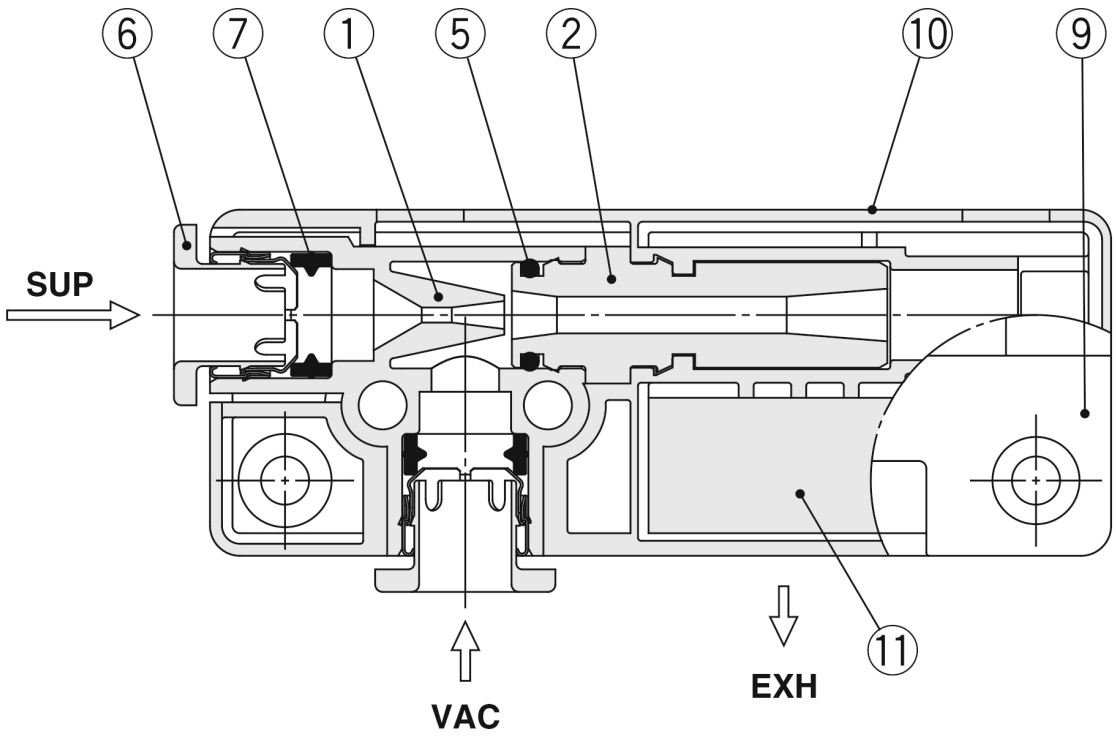

Component Parts

No.	Description	Material	Note
1	**Body**	PBT	
2	**Diffuser**	PPS	Type S: Brown, Type L: Black
5	**O-ring**	NBR	Grease applied
6	**Cassette**	—	
7	**Seal**	NBR	Grease applied
9	**Cover A**	PBT	
10	**Cover B**	PBT	With identification mark for type S or type L (Refer to page 23 for details.)
11	**Sound absorbing material**	Resin	

Specifications are subject to change without prior notice and any obligation on the part of the manufacturer.

SMC CORPORATION Zuazobidea 14, 01012, Vitoria-Gasteiz, Álava +34 945184100 +34 945184126 www.smc.eu emcmarketing@smc.smces.es

Additional information

Catalogue	ZH-C_EU.pdf
Operation manuals	OM_ZH_OM00401EN-B.pdf

Specifications are subject to change without prior notice and any obligation on the part of the manufacturer.

SMC CORPORATION Zuazobidea 14, 01012, Vitoria-Gasteiz, Álava +34 945184100 +34 945184126 www.smc.eu emcmarketing@smc.smces.es