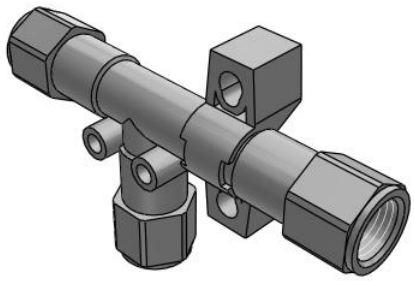

ZH-A, Vacuum Ejector, Box Style/Body Ported Style, Metric

ZH05DSA-F01-F01-F01

Datasheet

General series information

- One-touch fittings: Ø 6, 8, 10 and 12 mm. Screw-in connections: 1/8" to 1/2" (Rc/G).

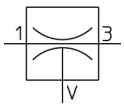

Vacuum ejector

Standard specifications

Nozzle Diameter	05 (Ø 0.5 mm)
Model	D (Body Ported Style)
Vacuum Pressure	S [-90 kPa; -89 kPa (Box Style)]
Port SUP.	F01 (G 1/8)
Port VAC.	F01 (G 1/8)
Port EXH.	F01 (G 1/8)
Accessories	W/ Bracket - W/o Silencer (or None in the Case of Box Style)
Pressure medium	Air
Maximum temperature of pressure medium	50 ºC
Minimum temperature of pressure medium	-5 ºC
Maximum ambient temperature	50 ºC
Minimum ambient temperature	-5 ºC
Pneumatic input connection	Screw-in G 1/8
Pneumatic exhaust connection	Screw-in G 1/8
Flow rate	6 l/min (ANR)
Usable tubing material	Nylon;Polyurethane;Soft nylon
Pneumatic vacuum connection	Screw-in G 1/8
Maximum Vacuum	-90 kPa
Nozzle nominal size [mm]	0.5 mm
Weight	0.028 Kg

Specifications are subject to change without prior notice and any obligation on the part of the manufacturer.

SMC CORPORATION Zuazobidea 14, 01012, Vitoria-Gasteiz, Álava +34 945184100 +34 945184126 www.smc.eu emcmarketing@smc.smces.es

Dimensions

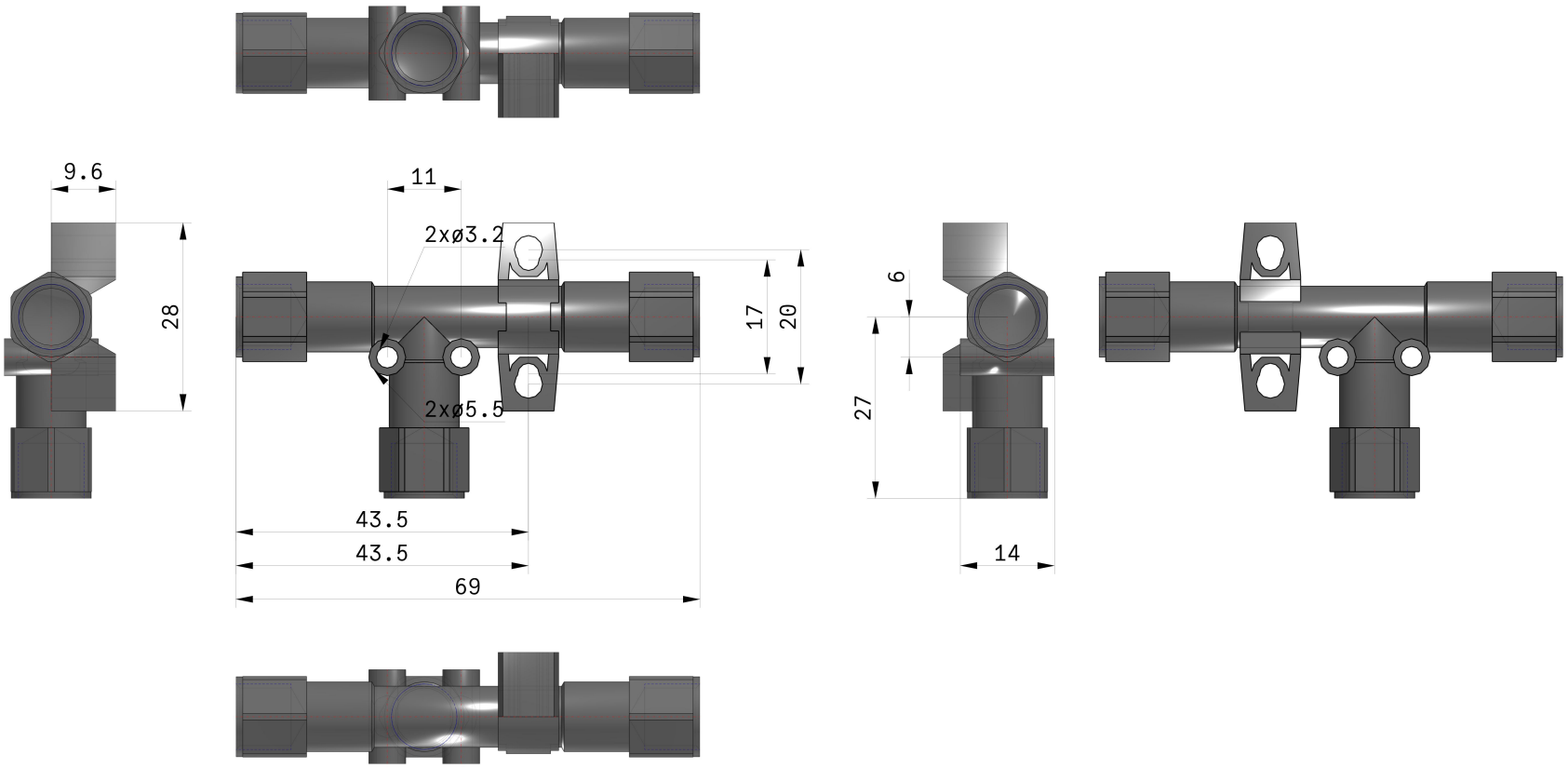

Specifications are subject to change without prior notice and any obligation on the part of the manufacturer.

SMC CORPORATION Zuazobidea 14, 01012, Vitoria-Gasteiz, Álava +34 945184100 +34 945184126 www.smc.eu emcmarketing@smc.smces.es

Constructions

Body ported type

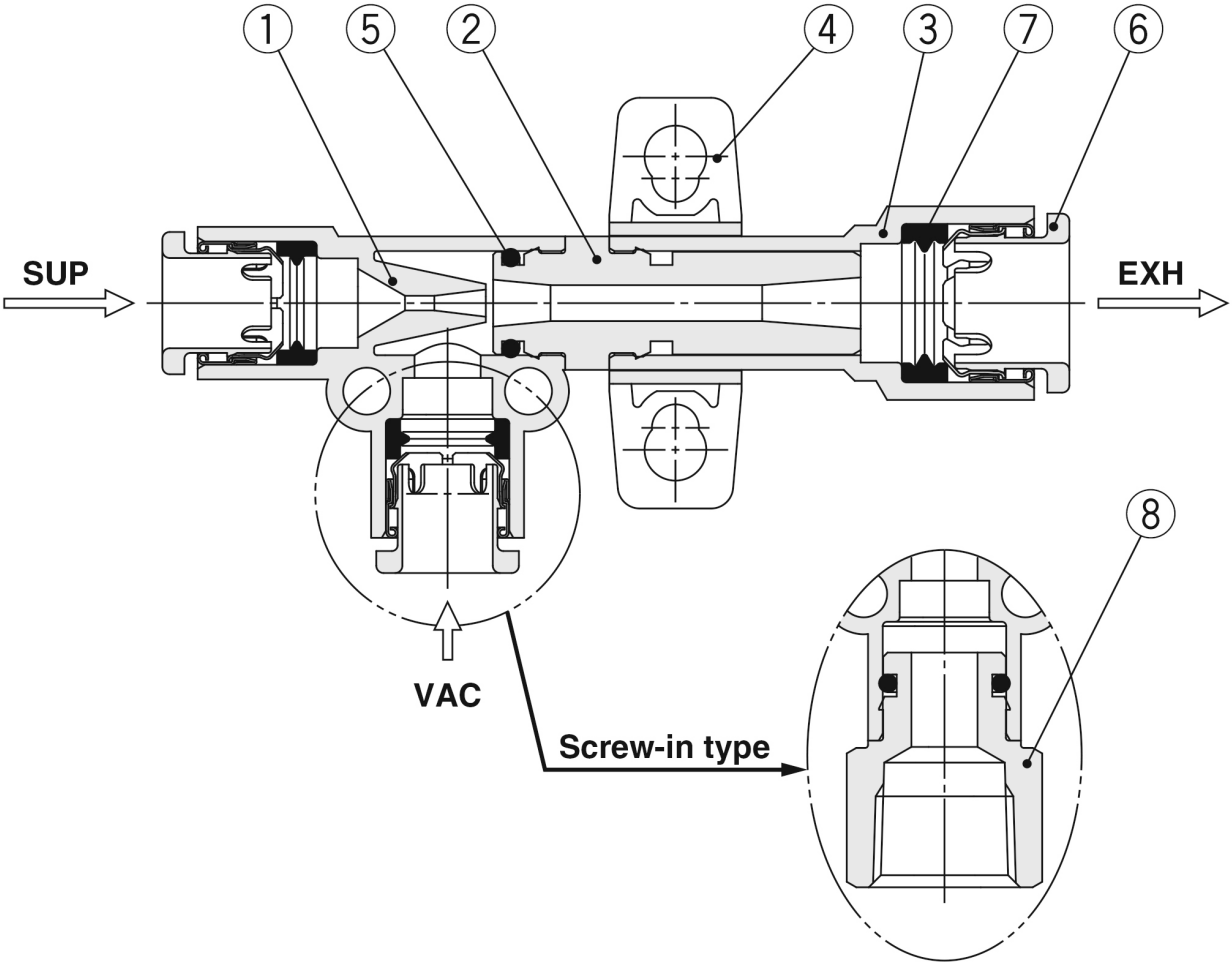

Component Parts

No.	Description	Material	Note
1	**Body**	PBT	
2	**Diffuser**	PPS	Type S: Brown, Type L: Black
3	**Adapter**	PBT	
4	**Standard bracket**	PBT	Detachable (Accessory)
5	**O-ring**	NBR	Grease applied
6	**Cassette**	—	
7	**Seal**	NBR	Grease applied
8	**Screw-in stud**	Brass	Electroless nickel plating

Specifications are subject to change without prior notice and any obligation on the part of the manufacturer.

SMC CORPORATION Zuazobidea 14, 01012, Vitoria-Gasteiz, Álava +34 945184100 +34 945184126 www.smc.eu emcmarketing@smc.smces.es

Additional information

Catalogue	ZH-C_EU.pdf
Operation manuals	OM_ZH_OM00401EN-B.pdf

Specifications are subject to change without prior notice and any obligation on the part of the manufacturer.

SMC CORPORATION Zuazobidea 14, 01012, Vitoria-Gasteiz, Álava +34 945184100 +34 945184126 www.smc.eu emcmarketing@smc.smces.es