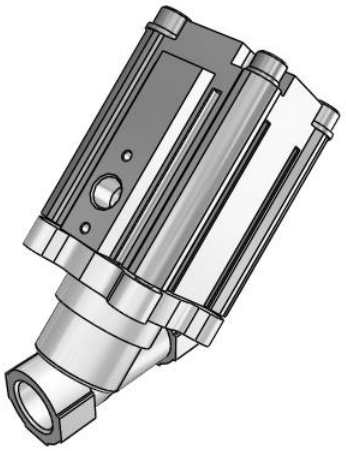

VXB, Air Operated, Angle Seat Valve
VXB215AHA

Datasheet

General series information

- For steam (can also be used with air and water)
- Low pressure loss due to angle seat structure
- Low leakage of 10 cm3/min or less (rubber seal)
- Long service life: 3 million cycles (steam) 5 million cycles (air)
- Body material: stainless steel 316L equivalent, bronze (CAC)

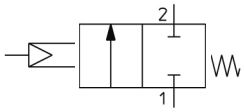

Directional control valve 2/2-way valve, closed normal position With pressure control Return with mechanical control spring

Standard specifications

Body Material/Port Size/Orifice Diameter	A (Bronze, 3/8, 11)
Special Option	No Insulated Adapter
Thread Type	A (G)
Pressure Type	H (High Pressure)
Indicator	No
Maximum temperature of pressure medium	183 ºC
Maximum operating pressure	1.6 MPa
Proof pressure	2.4 MPa
Maximum ambient temperature	60 ºc;60 ºc
Minimum ambient temperature	-20 ºC;-20 ºC
Pneumatic input connection	G 1/8
Orifice diameter	Ø11 mm
Weight	0.570 Kg

Specifications are subject to change without prior notice and any obligation on the part of the manufacturer.

SMC United Kingdom +34 945184126 sales@smc.uk

Dimensions

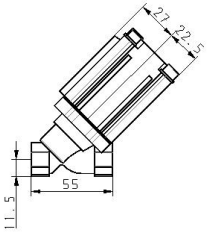

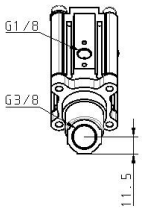

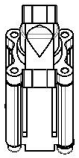

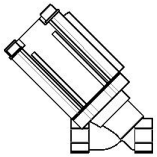

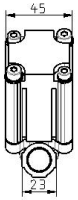

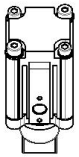

Specifications are subject to change without prior notice and any obligation on the part of the manufacturer.

SMC United Kingdom +34 945184126 sales@smc.uk

Constructions

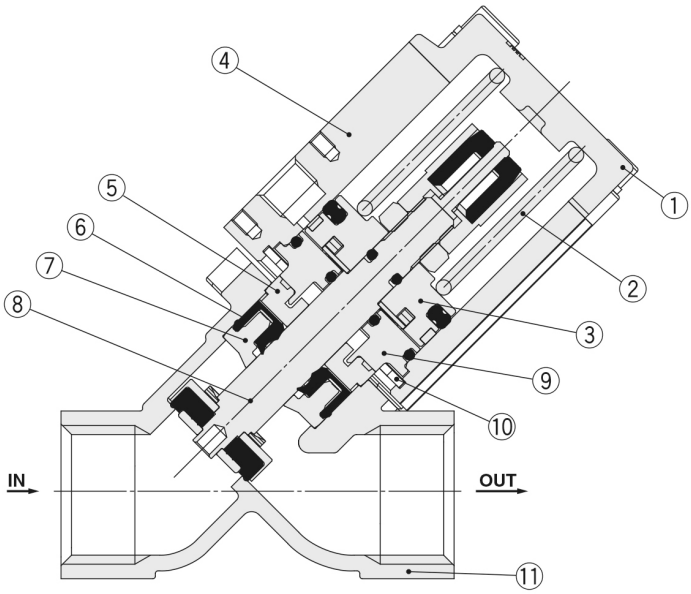

Component Parts

No.	Description	Material
1	**Cover**	Stainless steel 316L equivalent
2	**Spring**	Stainless steel 304
3	**Piston assembly**	Al, FKM, PTFE, Stainless steel 304
4	**Housing**	Al
5	**Guide bushing**	PPS
6	**Squeeze seal with scraper function**	FKM
7	**Resin scraper**	PEEK
8	**Main valve assembly**	FKM, Stainless steel 316L
9	**Bushing assembly**	Al, FKM
10	**Inverted internal retaining ring**	Fe
11	**Body**	CAC or Stainless steel 316L equivalent

Specifications are subject to change without prior notice and any obligation on the part of the manufacturer.

SMC United Kingdom +34 945184126 sales@smc.uk

Additional information

Catalogue	VXB-B_EU.pdf

Specifications are subject to change without prior notice and any obligation on the part of the manufacturer.

SMC United Kingdom +34 945184126 sales@smc.uk