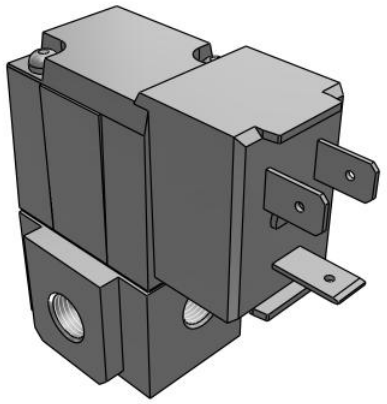

VT307, 3 Port Direct Operated Poppet, All Types

VT307W-5DO1-01F-Q

Datasheet

General series information

- Wide variety of valve options .
- Low Power Consumption.
- Universal porting type.
- Same mounting dimensions as the current product in both types (body ported and for manifold type).
- Low concentration ozone resistant: HNBR rubber seal.
- RoHS and CE compliant.

Standard specifications

Body	T (Body Ported)
Valve Specifications	W (Energy saving/Vacuum)
Pressure specifications	Standard Type (0.7 MPa)/for vacuum (0.1 MPa)
Rated Voltage	5 (24 VDC)
Electrical Entry	DO (DIN Connector without Connector)
Indicator light and surge voltage suppressor	None
Port Size	01 (1/8 [6A])
Thread	F (G [PF])
Option	None
CE-Compliant	Q (CE-Marked)
Pressure medium	Air
Maximum temperature of pressure medium	50 ºC
Minimum temperature of pressure medium	-10 ºC (No freezing)
Maximum ambient temperature	50 ºC
Minimum ambient temperature	-10 ºC (No freezing)
Protection class with connector	Dustproof
Function in normal position	Closed

Specifications are subject to change without prior notice and any obligation on the part of the manufacturer.

SMC CORPORATION Zuazobidea 14, 01012, Vitoria-Gasteiz, Álava +34 945184100 +34 945184126 www.smc.eu support.marketingeurope@smc.com

Type of piloting	Directly
Valve return	Mechanical spring
Sealing principle	Soft seal
Weight	0.180 Kg

Specifications are subject to change without prior notice and any obligation on the part of the manufacturer.

SMC CORPORATION Zuazobidea 14, 01012, Vitoria-Gasteiz, Álava +34 945184100 +34 945184126 www.smc.eu support.marketingeurope@smc.com

Dimensions

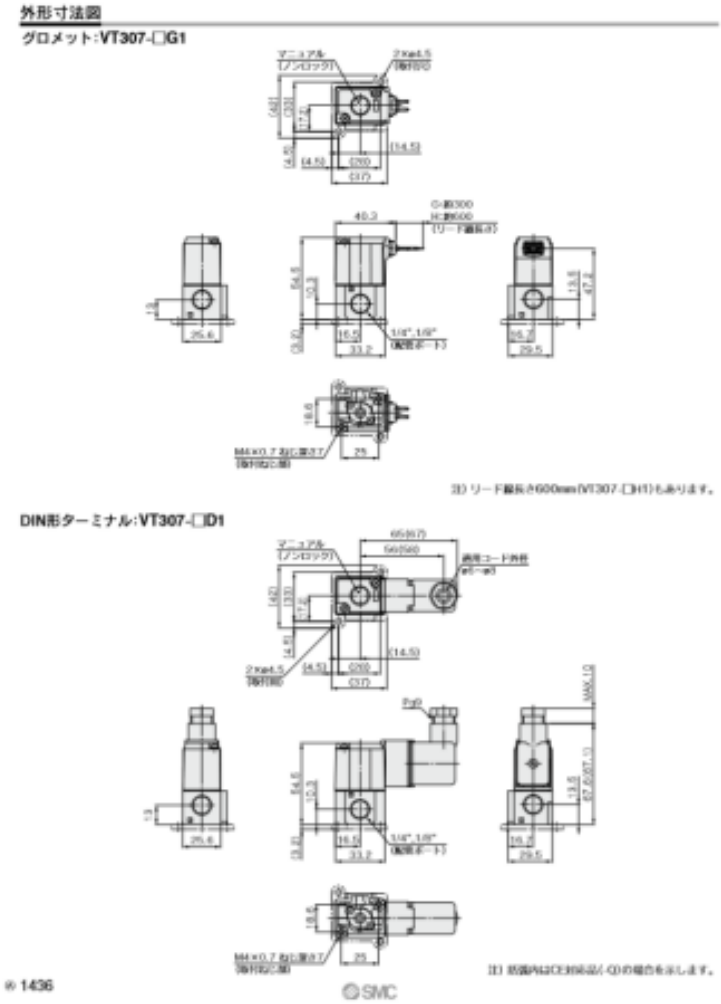

Specifications are subject to change without prior notice and any obligation on the part of the manufacturer.

SMC CORPORATION Zuazobidea 14, 01012, Vitoria-Gasteiz, Álava +34 945184100 +34 945184126 www.smc.eu support.marketingeurope@smc.com

Additional information

Catalogue	VT_A_EU.pdf
Declaration of conformity	newDoC_VT307N_TF1Y176EN.pdf newDoC_New_VT307_TF1V163EN.pdf DoC_NewVT307_TFQ0001-A.pdf
Installation manuals	IM_VT307_TF2Z546EN.pdf
Operation manuals	OM_VT307_OMQ0002EN-C.pdf

Specifications are subject to change without prior notice and any obligation on the part of the manufacturer.

SMC CORPORATION Zuazobidea 14, 01012, Vitoria-Gasteiz, Álava +34 945184100 +34 945184126 www.smc.eu support.marketingeurope@smc.com