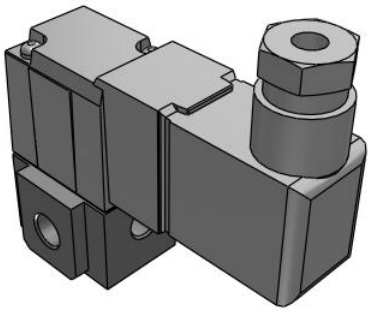

# VT307, 3 Port Direct Operated Poppet, All Types

## VT307EK-5DZ1-01F-Q

Datasheet

## General series information

- Wide variety of valve options .
- Low Power Consumption.
- Universal porting type.
- Same mounting dimensions as the current product in both types (body ported and for manifold type).
- Low concentration ozone resistant: HNBR rubber seal.
- RoHS and CE compliant.

## Standard specifications

| | |
|---|---|
| Body | T (Body Ported) |
| Valve Specifications | E (Continuous Duty) |
| Pressure specifications | K (High-pressure, 1.0 MPa) |
| Rated Voltage | 5 (24 VDC) |
| Electrical Entry | D (DIN connector [with connector]) |
| Indicator light and surge voltage suppressor | Z (w/Light and Surge Voltage Suppressor) |
| Port Size | 01 (1/8 [6A]) |
| Thread | F (G [PF]) |
| Option | None |
| CE-Compliant | Q (CE-Marked) |
| Pressure medium | Air |
| Maximum temperature of pressure medium | 50 ºC |
| Minimum temperature of pressure medium | -10 ºC (No freezing) |
| Maximum ambient temperature | 50 ºC |
| Minimum ambient temperature | -10 ºC (No freezing) |
| Protection class with connector | Dustproof |
| Function in normal position | Closed |

Specifications are subject to change without prior notice and any obligation on the part of the manufacturer.



SMC CORPORATION Zuazobidea 14, 01012, Vitoria-Gasteiz, Álava +34 945184100 +34 945184126 www.smc.eu support.marketingeurope@smc.com

| | |
|---|---|
| Type of piloting | Directly |
| Valve return | Mechanical spring |
| Sealing principle | Soft seal |
| Weight | 0.177 Kg |

Specifications are subject to change without prior notice and any obligation on the part of the manufacturer.



SMC CORPORATION Zuazobidea 14, 01012, Vitoria-Gasteiz, Álava +34 945184100 +34 945184126 www.smc.eu support.marketingeurope@smc.com

# Dimensions

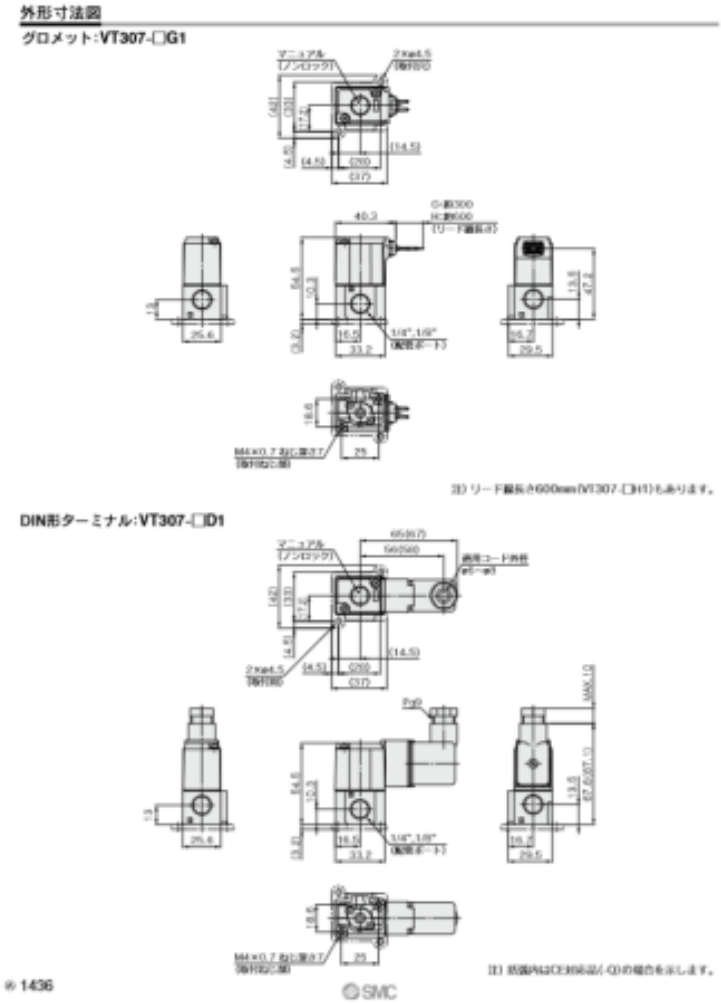


Specifications are subject to change without prior notice and any obligation on the part of the manufacturer.



SMC CORPORATION Zuazobidea 14, 01012, Vitoria-Gasteiz, Álava +34 945184100 +34 945184126 www.smc.eu support.marketingeurope@smc.com

# Additional information

| | |
|---|---|
| Catalogue | VT_A_EU.pdf |
| Declaration of conformity | newDoC_VT307N_TF1Y176EN.pdf<br>newDoC_New_VT307_TF1V163EN.pdf<br>DoC_NewVT307_TFQ0001-A.pdf |
| Installation manuals | IM_VT307_TF2Z546EN.pdf |
| Operation manuals | OM_VT307_OMQ0002EN-C.pdf |

Specifications are subject to change without prior notice and any obligation on the part of the manufacturer.



SMC CORPORATION Zuazobidea 14, 01012, Vitoria-Gasteiz, Álava +34 945184100 +34 945184126 www.smc.eu support.marketingeurope@smc.com