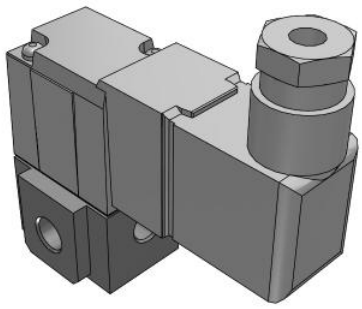

VT307, 3 Port Direct Operated Poppet, All Types

VT307-5DZ1-01F-Q

Datasheet

General series information

- Wide variety of valve options .
- Low Power Consumption.
- Universal porting type.
- Same mounting dimensions as the current product in both types (body ported and for manifold type).
- Low concentration ozone resistant: HNBR rubber seal.
- RoHS and CE compliant.

Standard specifications

Pressure specifications	Standard Type [0.7 MPa]
Electrical Entry	D (DIN connector [with connector])
Port Size	01 (1/8 [6A])
CE Marked	Q (CE Marked)
Indicator light and surge voltage suppressor	Z (W/indicator light and surge suppressor)
Option	None
Body	T (Body Ported)
Valve specification	Standard
Rated Voltage	5 (24V DC)
Thread	F (G [PF])
Pressure medium	Air
Maximum temperature of pressure medium	50 ºC
Minimum temperature of pressure medium	-10 ºC (No freezing)
Maximum ambient temperature	50 ºC
Minimum ambient temperature	-10 ºC (No freezing)
Protection class with connector	Dustproof
Function in normal position	Closed

Specifications are subject to change without prior notice and any obligation on the part of the manufacturer.

SMC United Kingdom +34 945184126 sales@smc.uk

Type of piloting	Directly
Valve return	Mechanical spring
Sealing principle	Soft seal
Weight	0.150 Kg

Specifications are subject to change without prior notice and any obligation on the part of the manufacturer.

SMC United Kingdom +34 945184126 sales@smc.uk

Dimensions

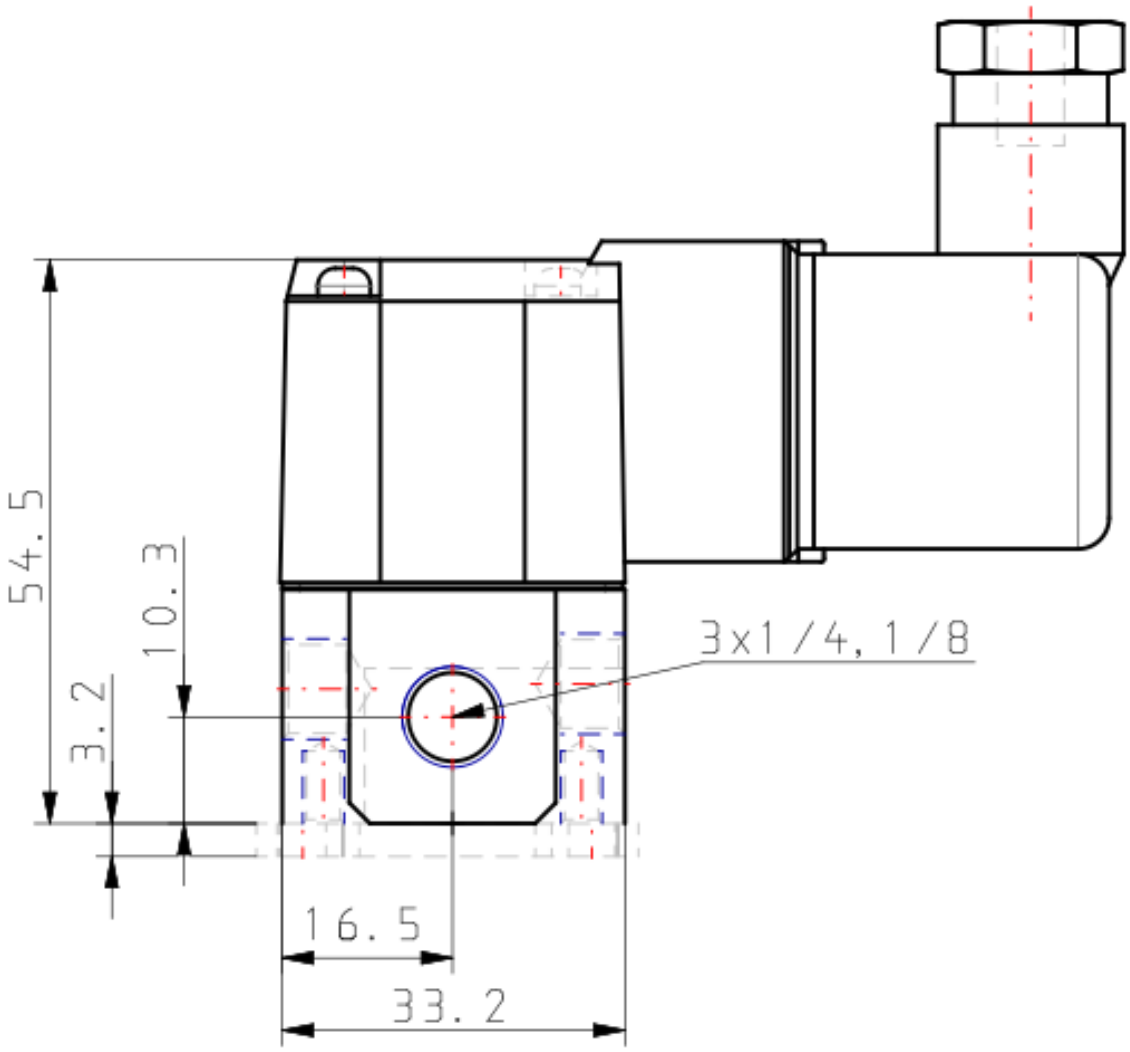

Specifications are subject to change without prior notice and any obligation on the part of the manufacturer.

SMC United Kingdom +34 945184126 sales@smc.uk

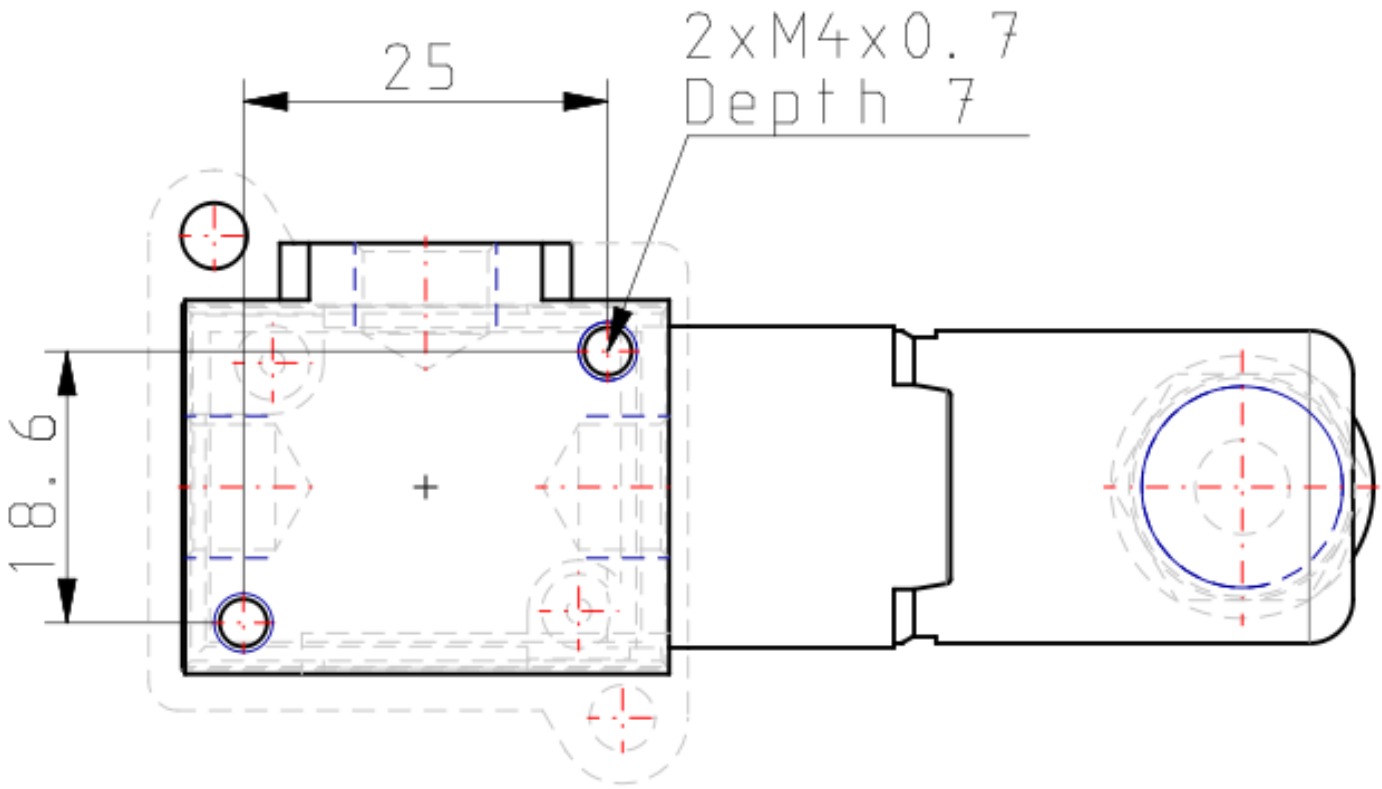

Specifications are subject to change without prior notice and any obligation on the part of the manufacturer.

SMC United Kingdom +34 945184126 sales@smc.uk

Additional information

Catalogue	VT_A_EU.pdf
Declaration of conformity	newDoC_VT307N_TF1Y176EN.pdf newDoC_New_VT307_TF1V163EN.pdf DoC_NewVT307_TFQ0001-A.pdf
Installation manuals	IM_VT307_TF2Z546EN.pdf
Operation manuals	OM_VT307_OMQ0002EN-C.pdf

Specifications are subject to change without prior notice and any obligation on the part of the manufacturer.

SMC United Kingdom +34 945184126 sales@smc.uk