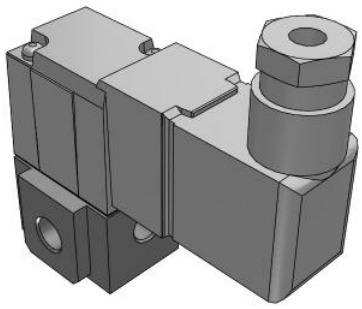

# VT307, 3 Port Direct Operated Poppet, All Types

## VT307-5D1-01F-Q

Datasheet

## General series information

- Wide variety of valve options .
- Low Power Consumption.
- Universal porting type.
- Same mounting dimensions as the current product in both types (body ported and for manifold type).
- Low concentration ozone resistant: HNBR rubber seal.
- RoHS and CE compliant.

## Standard specifications

| | |
|---|---|
| Pressure specifications | Standard type (0.7 MPa)/for vacuum (0.1 MPa) |
| Electrical entry | D (DIN connector [with connector]) |
| Port size | 01 (1/8 [6A]) |
| Voltage | 5 (24V DC) |
| CE Marked | Q (CE Marked) |
| Indicator light and surge voltage suppressor | None |
| Option | None |
| Body | T (Body ported) |
| Valve specification | Standard |
| Thread | F (G [PF]) |
| Pressure medium | Air |
| Maximum temperature of pressure medium | 50 ºC |
| Minimum temperature of pressure medium | -10 ºC (No freezing) |
| Maximum ambient temperature | 50 ºC |
| Minimum ambient temperature | -10 ºC (No freezing) |
| Protection class with connector | Dustproof |
| Function in normal position | Closed |

Specifications are subject to change without prior notice and any obligation on the part of the manufacturer.



SMC United Kingdom +34 945184126 sales@smc.uk

| | |
|---|---|
| Type of piloting | Directly |
| Valve return | Mechanical spring |
| Sealing principle | Soft seal |
| Weight | 0.180 Kg |

Specifications are subject to change without prior notice and any obligation on the part of the manufacturer.



SMC United Kingdom +34 945184126 sales@smc.uk

## Dimensions

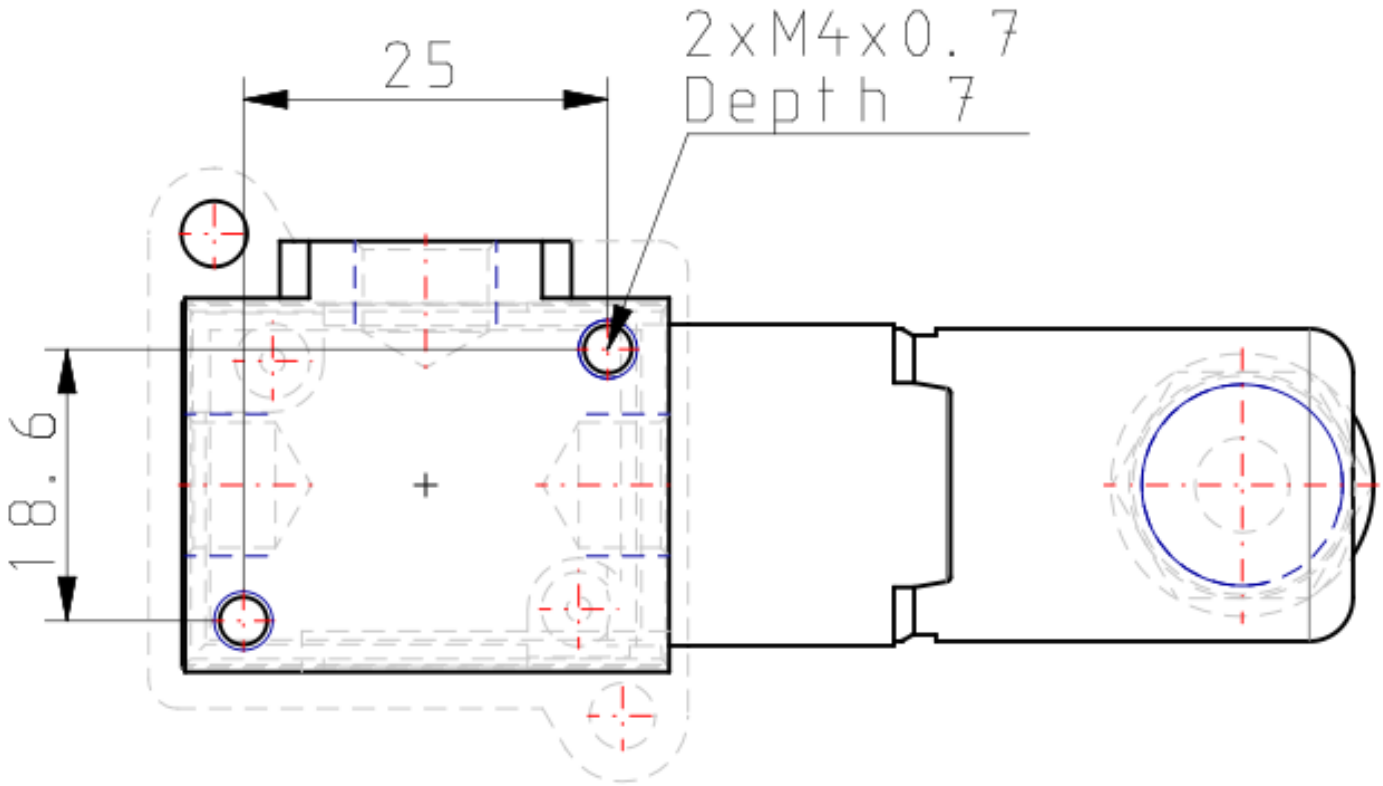


Specifications are subject to change without prior notice and any obligation on the part of the manufacturer.



SMC United Kingdom +34 945184126 sales@smc.uk

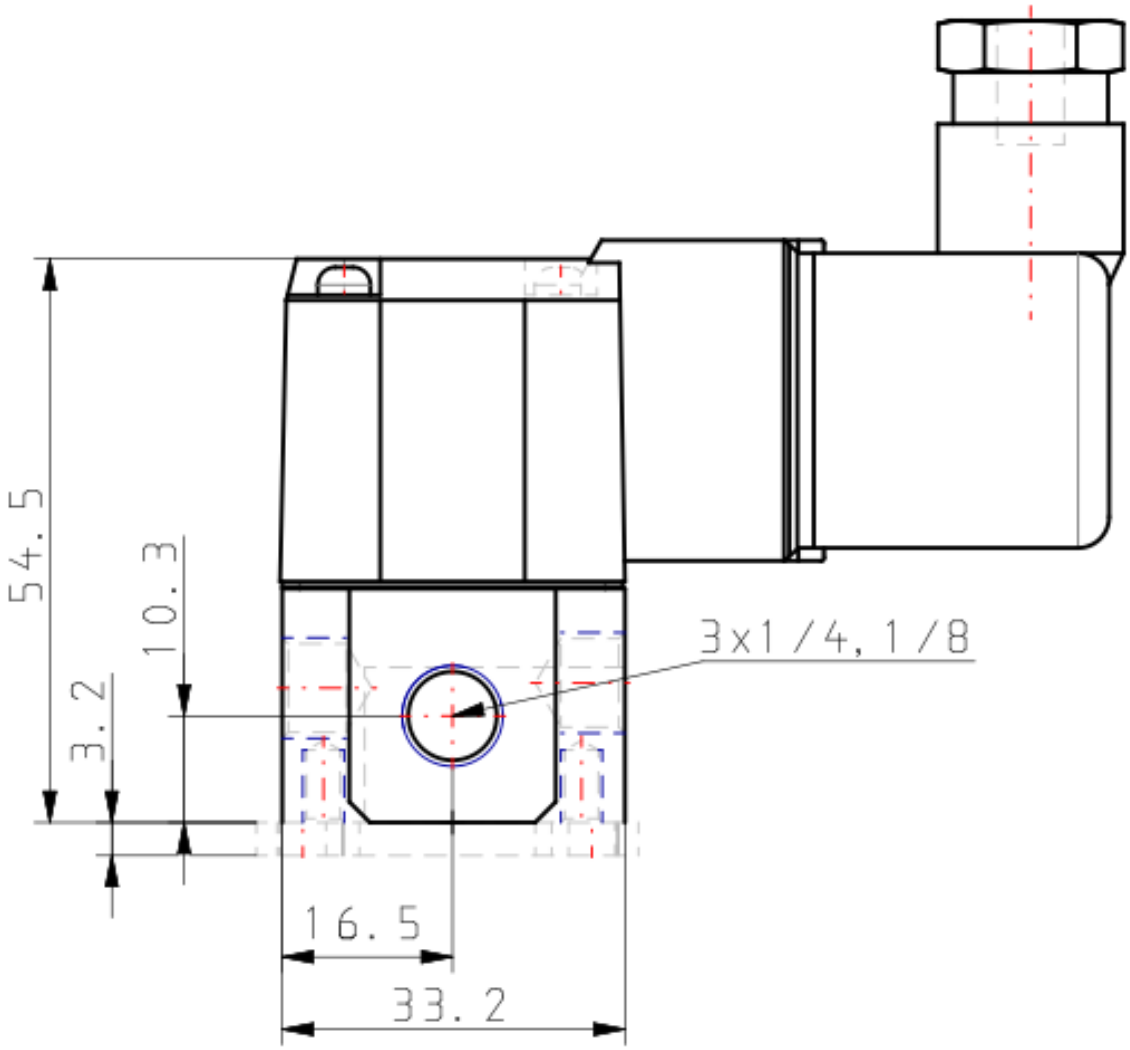


Specifications are subject to change without prior notice and any obligation on the part of the manufacturer.



SMC United Kingdom +34 945184126 sales@smc.uk

# Additional information

| | |
|---|---|
| Catalogue | VT_A_EU.pdf |
| Declaration of conformity | newDoC_VT307N_TF1Y176EN.pdf<br>newDoC_New_VT307_TF1V163EN.pdf<br>DoC_NewVT307_TFQ0001-A.pdf |
| Installation manuals | IM_VT307_TF2Z546EN.pdf |
| Operation manuals | OM_VT307_OMQ0002EN-C.pdf |

Specifications are subject to change without prior notice and any obligation on the part of the manufacturer.



SMC United Kingdom +34 945184126 sales@smc.uk