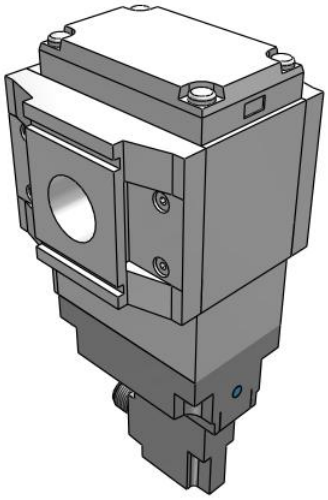

Residual Pressure Relief Valve – VP*46E-X660/X661

VP746E-5KVOZ1-X661

Datasheet

General series information

- Block the air supply to the secondary side
- Optionally slow air ramp-up when equipment is restarted
- Select from normally closed or normally open.

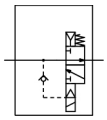

Residual pressure relief 3-port solenoid valve, normally open

Standard specifications

Series	7 (VP700)
Rated voltage	5 (24 VDC)
M12 Connector	KVO (Without Connector)
Manual Override	Non-locking Push Type
Soft start-up Function	None
Made to Order	X661 (N.O., Special Cable Entry Direction)
Pressure medium	Air
Maximum temperature of pressure medium	50 °C
Minimum temperature of pressure medium	-10 °C (No freezing)
Maximum operating pressure	0.7 MPa
Minimum operating pressure	0.2 MPa
Proof pressure	1.05 MPa
Maximum ambient temperature	50 °C
Minimum ambient temperature	-10 °C (No freezing)
General power supply	24 VDC
Conform to the European RoHS Directive	Conform
Approvals	CE, UKCA
Enclosure	IP65
Power Consumption	0.4 W

Specifications are subject to change without prior notice and any obligation on the part of the manufacturer.

SMC CORPORATION Zuazobidea 14, 01012, Vitoria-Gasteiz, Álava +34 945184100 +34 945184126 www.smc.eu support.marketingeurope@smc.com

Dimensions

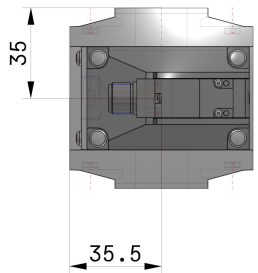

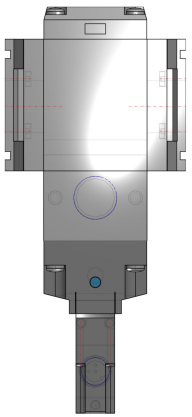

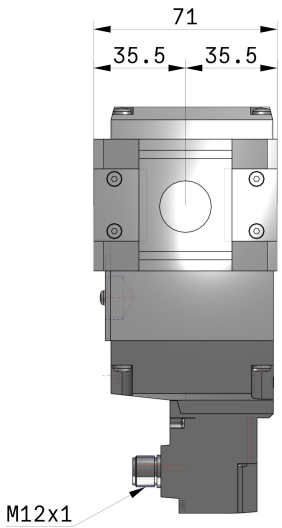

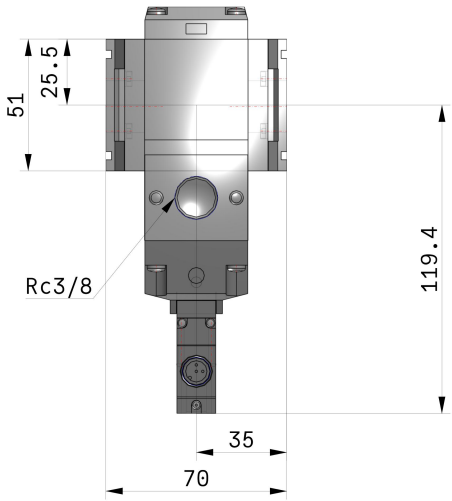

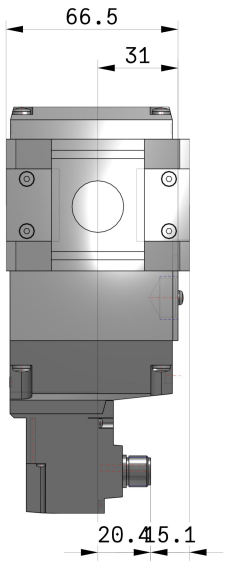

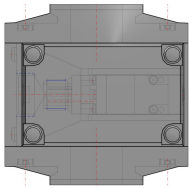

Specifications are subject to change without prior notice and any obligation on the part of the manufacturer.

SMC CORPORATION Zuazobidea 14, 01012, Vitoria-Gasteiz, Álava +34 945184100 +34 945184126 www.smc.eu support.marketingeurope@smc.com

Additional information

Catalogue	AMS-Da_EU.pdf
Declaration of conformity	newDoC_PF_TF122129EN.pdf
Installation manuals	IM_AMS_TF223-005EN-A.pdf IM_EXA1_TF222-139EN-B.pdf IM_EXW1-A11N-X1_TF222-092EN-A.pdf
Operation manuals	AMS_Guide_for_Machine_Retrofitting.pdf OM_AMS_20-30-40-60_OMA1007EN-G.pdf

Specifications are subject to change without prior notice and any obligation on the part of the manufacturer.

SMC CORPORATION Zuazobidea 14, 01012, Vitoria-Gasteiz, Álava +34 945184100 +34 945184126 www.smc.eu support.marketingeurope@smc.com