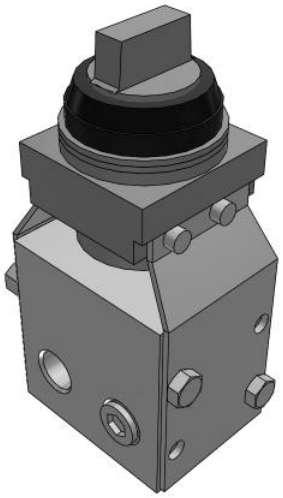

VM200, 200 Series 2/3 Port Mechanical Valve

VM230-F02-35RA

Datasheet

General series information

- Fluid: Air/Inert gas.
- Large flow capacity.
- Possible to choose mounting method with side ported.
- Variety of actuator types.

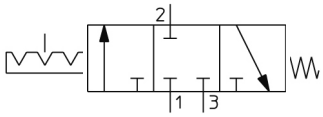

Directional control valve 3/3-way valve, closed neutral position Push/pull control mechanism with detent Return with mechanical control spring

Standard specifications

Number of Ports	3 Port
Body Option	Side Mounting
Port Size	F02 (G 1/4)
Actuator type	35 [Twist Selector (3 Position)]
Suffix	R (Red)
Bracket	None
Pressure medium	Air/Inert gas
Maximum temperature of pressure medium	60 ºC
Minimum temperature of pressure medium	-5 ºC (No freezing)
Maximum operating pressure	1.0 MPa
Minimum operating pressure	0 MPa
Maximum ambient temperature	60 ºC
Minimum ambient temperature	-5 ºC (No freezing)
Pneumatic input connection	G 1/4
Pneumatic exhaust connection	G 1/4
Function in normal position	Exhausted
Type of piloting	Directly
Valve return	Mechanical spring
Flow rate	1088 l/min

Specifications are subject to change without prior notice and any obligation on the part of the manufacturer.

SMC CORPORATION Zuazobidea 14, 01012, Vitoria-Gasteiz, Álava +34 945184100 +34 945184126 www.smc.eu support.marketingeurope@smc.com

Critical pressure ratio	0.4
Sonic conductance dm3/(s·bar)	4
Actuation type	Manually

Specifications are subject to change without prior notice and any obligation on the part of the manufacturer.

SMC CORPORATION Zuazobidea 14, 01012, Vitoria-Gasteiz, Álava +34 945184100 +34 945184126 www.smc.eu support.marketingeurope@smc.com

Dimensions

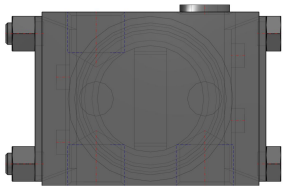

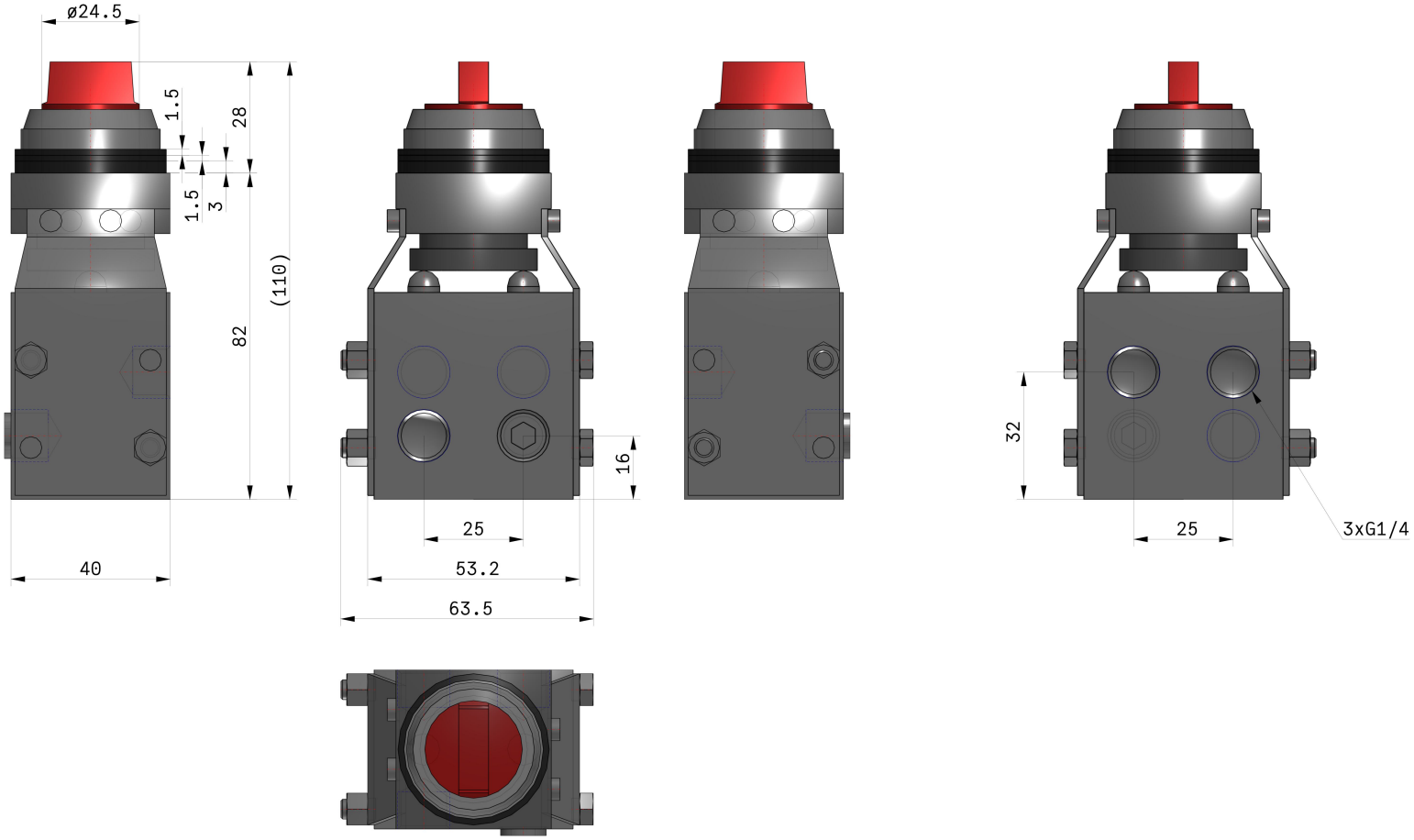

Specifications are subject to change without prior notice and any obligation on the part of the manufacturer.

SMC CORPORATION Zuazobidea 14, 01012, Vitoria-Gasteiz, Álava +34 945184100 +34 945184126 www.smc.eu support.marketingeurope@smc.com

Constructions

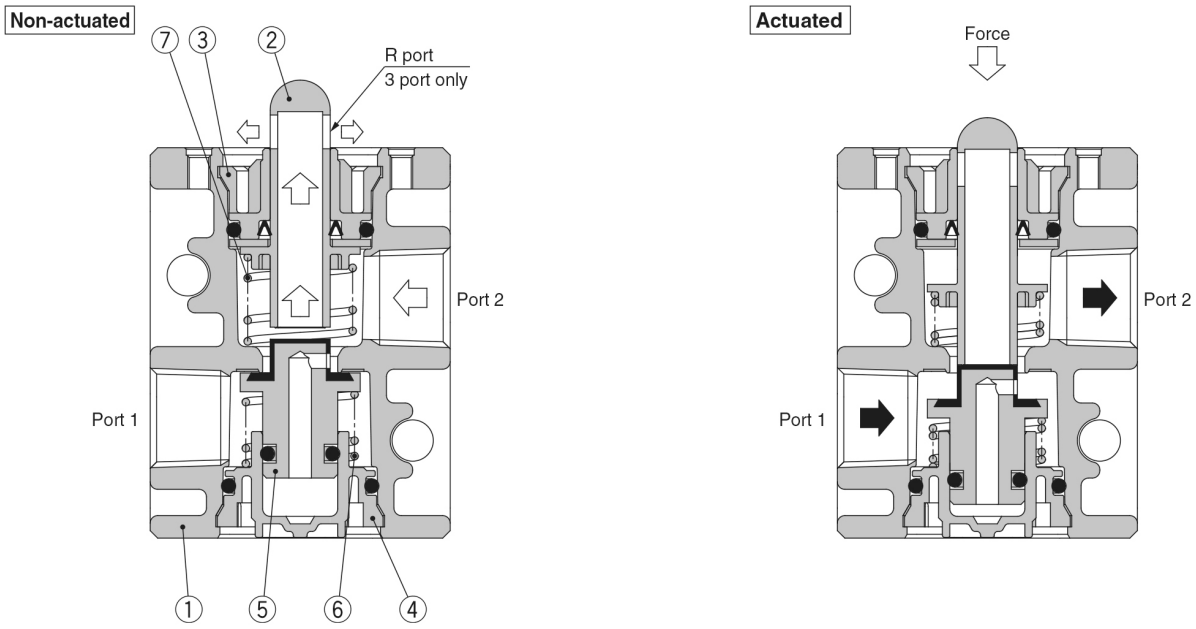

Component Parts

No.	Description	Material	Note	
1	**Valve**	ADC	White coated	
2	**Plunger**	Polyacetal	2 port	Grey
			3 port	White
3	**Plunger retainer**	PBT		
4	**Cover**	PBT		
5	**Inner valve**	NBR, Brass		
6	**Spring**	Stainless steel		
7	**Spring**	Spring steel		

Specifications are subject to change without prior notice and any obligation on the part of the manufacturer.

SMC CORPORATION Zuazobidea 14, 01012, Vitoria-Gasteiz, Álava +34 945184100 +34 945184126 www.smc.eu support.marketingeurope@smc.com

Additional information

Catalogue	VM100-200-A_EU.pdf
Installation manuals	IM_VM100_TF2Z478EN-D.pdf

Specifications are subject to change without prior notice and any obligation on the part of the manufacturer.

SMC CORPORATION Zuazobidea 14, 01012, Vitoria-Gasteiz, Álava +34 945184100 +34 945184126 www.smc.eu support.marketingeurope@smc.com