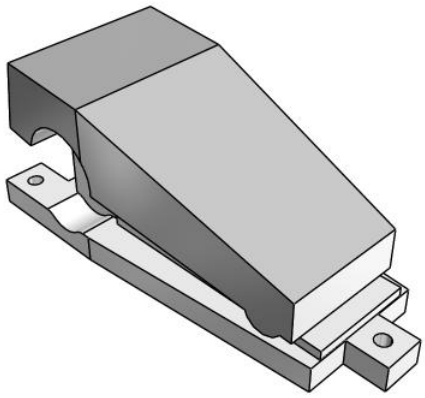

VM200, 200 Series 2/3 Port Mechanical Valve

VM220-F02-40A

Datasheet

General series information

- Fluid: Air/Inert gas.
- Large flow capacity.
- Possible to choose mounting method with side ported.
- Variety of actuator types.

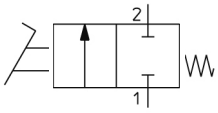

Directional control valve 2/2-way valve, closed normal position With manual control pedal Return with mechanical control spring

Standard specifications

Bracket	None
Suffix	None
Number of Ports	2 Port
Actuator type	40 (Foot Pedal)
Port Size	F02 (G 1/4)
Body Option	Side Mounting
Pressure medium	Air/Inert gas
Maximum temperature of pressure medium	60 ºC
Minimum temperature of pressure medium	-5 ºC (No freezing)
Maximum operating pressure	1.0 MPa
Minimum operating pressure	0 MPa
Maximum ambient temperature	60 ºC
Minimum ambient temperature	-5 ºC (No freezing)
Pneumatic input connection	G 1/4
Pneumatic exhaust connection	G 1/4
Function in normal position	Closed
Type of piloting	Directly
Valve return	Mechanical spring
Flow rate	1088 l/min

Specifications are subject to change without prior notice and any obligation on the part of the manufacturer.

SMC United Kingdom +34 945184126 sales@smc.uk

Critical pressure ratio	0.4
Sonic conductance dm3/(s·bar)	4
Actuation type	Manually
Weight	0.111 Kg

Specifications are subject to change without prior notice and any obligation on the part of the manufacturer.

SMC United Kingdom +34 945184126 sales@smc.uk

Dimensions

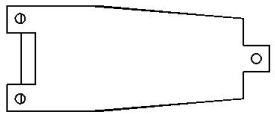

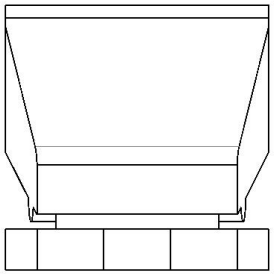

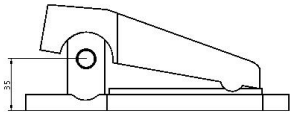

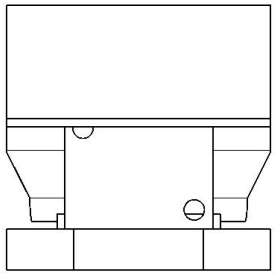

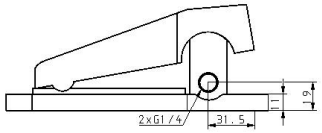

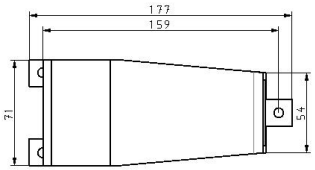

Specifications are subject to change without prior notice and any obligation on the part of the manufacturer.

SMC United Kingdom +34 945184126 sales@smc.uk

Constructions

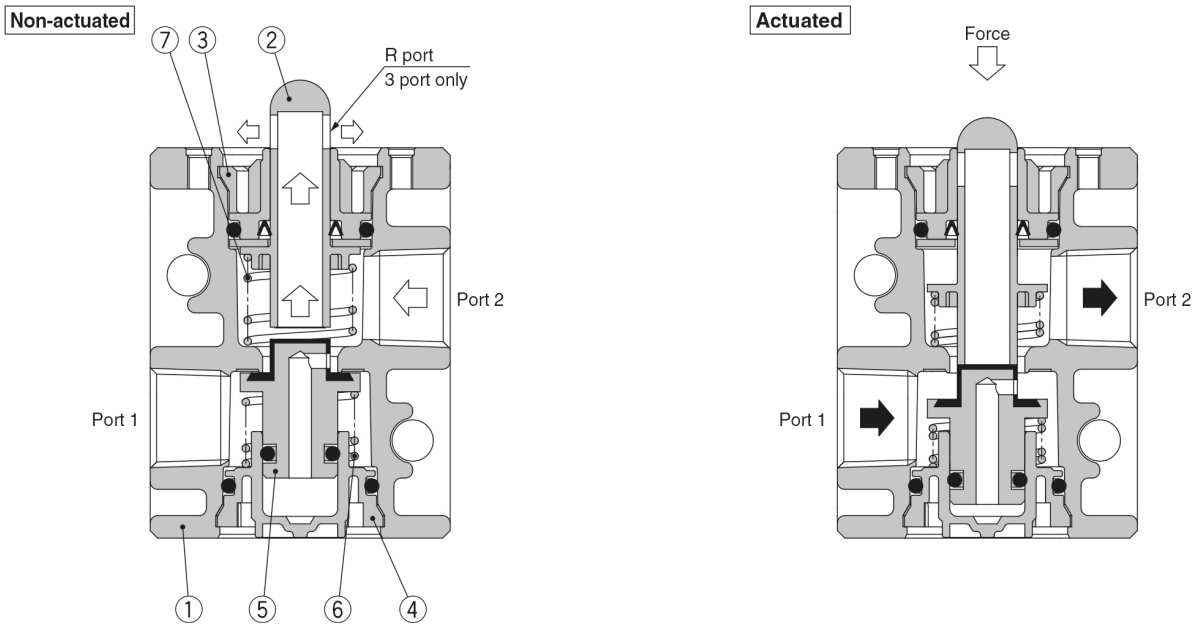

Component Parts

No.	Description	Material	Note	
1	**Valve**	ADC	White coated	
2	**Plunger**	Polyacetal	2 port	Grey
			3 port	White
3	**Plunger retainer**	PBT		
4	**Cover**	PBT		
5	**Inner valve**	NBR, Brass		
6	**Spring**	Stainless steel		
7	**Spring**	Spring steel		

Specifications are subject to change without prior notice and any obligation on the part of the manufacturer.

SMC United Kingdom +34 945184126 sales@smc.uk

Additional information

Catalogue	VM100-200-A_EU.pdf
Installation manuals	IM_VM100_TF2Z478EN-C.pdf

Specifications are subject to change without prior notice and any obligation on the part of the manufacturer.

SMC United Kingdom +34 945184126 sales@smc.uk