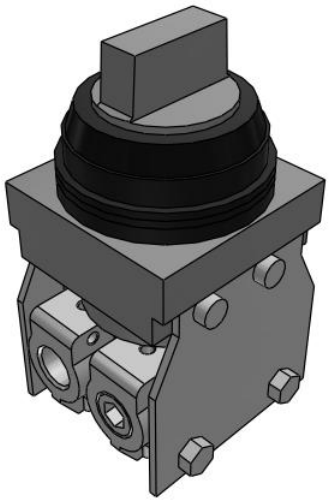

# VM100, 100 Series 2/3 Port Mechanical Valve

## VM131-F01-35GA

Datasheet

## General series information

- Fluid: Air/Inert gas.
- Compact size.
- Piping options: Side ported, Bottom ported.
- Possible to choose mounting method with side ported.
- Variety of actuator types.

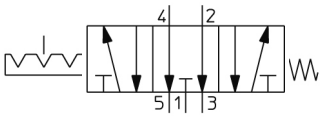


*Directional control valve 5/3-way valve,*
*exhaust neutral position Controlled with detent*
*Return with mechanical control spring*

## Standard specifications

| | |
|---|---|
| Number of Ports | 3 Port |
| Piping Direct., Plunger Length | 1 (Side Ported Short) |
| Body Option | Side Mounting |
| Port Size | F01 (G 1/8) Side Ported Only |
| Actuator type | 35 [Twist Selector (3 Position)] |
| Suffix | G (Green) |
| Indicator | None |
| Bracket | None |
| Pressure medium | Air/Inert gas |
| Maximum temperature of pressure medium | 60 ºC |
| Minimum temperature of pressure medium | -5 ºC (No freezing) |
| Maximum operating pressure | 1.0 MPa |
| Minimum operating pressure | −100 kPa |
| Maximum ambient temperature | 60 ºC |
| Minimum ambient temperature | -5 ºC (No freezing) |
| Pneumatic input connection | G 1/8 |
| Pneumatic exhaust connection | G 1/8 |
| Function in normal position | Exhausted |

*Specifications are subject to change without prior notice and any obligation on the part of the manufacturer.*



**SMC CORPORATION** Zuazobidea 14, 01012, Vitoria-Gasteiz, Álava +34 945184100 +34 945184126 www.smc.eu support.marketingeurope@smc.com

| | |
|---|---|
| Type of piloting | Directly |
| Valve return | Mechanical spring |
| Flow rate | 144 l/min |
| Critical pressure ratio | 0.2 |
| Sonic conductance dm3/(s·bar) | 0.6 |
| Actuation type | Manually |
| Weight | 0.231 Kg |

Specifications are subject to change without prior notice and any obligation on the part of the manufacturer.



SMC CORPORATION Zuazobidea 14, 01012, Vitoria-Gasteiz, Álava +34 945184100 +34 945184126 www.smc.eu support.marketingeurope@smc.com

# Dimensions

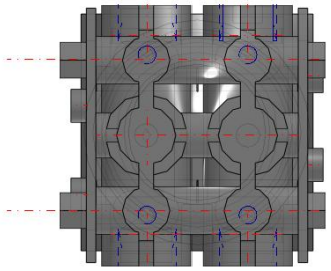

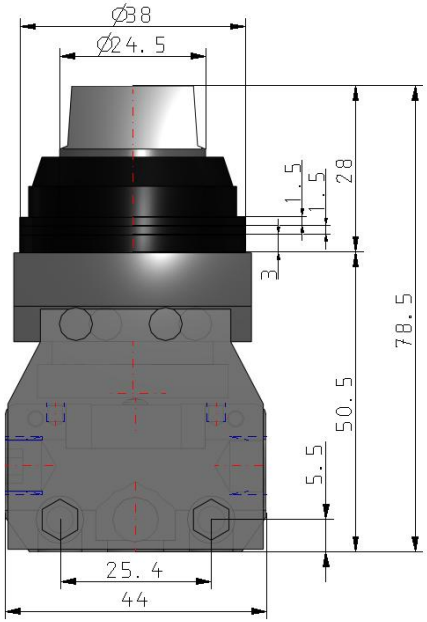


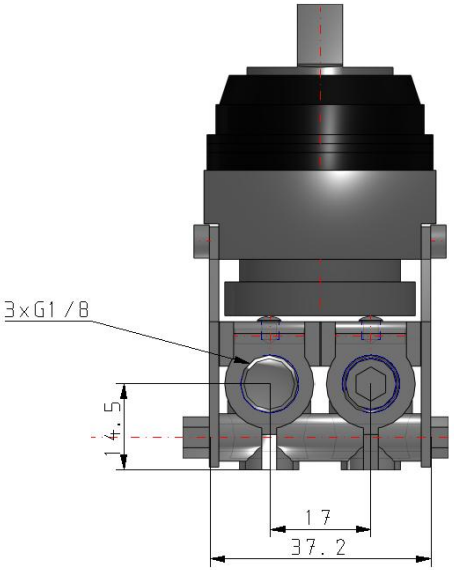


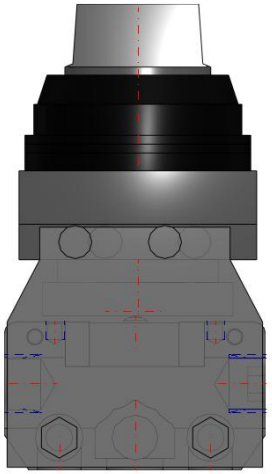

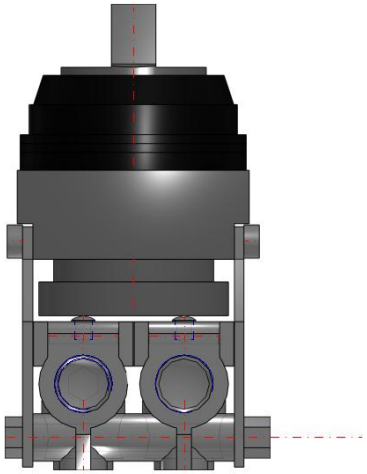

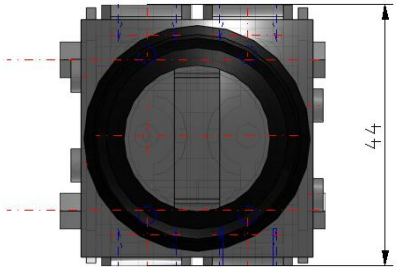


Specifications are subject to change without prior notice and any obligation on the part of the manufacturer.



SMC CORPORATION Zuazobidea 14, 01012, Vitoria-Gasteiz, Álava +34 945184100 +34 945184126 www.smc.eu support.marketingeurope@smc.com

# Constructions

## Side ported

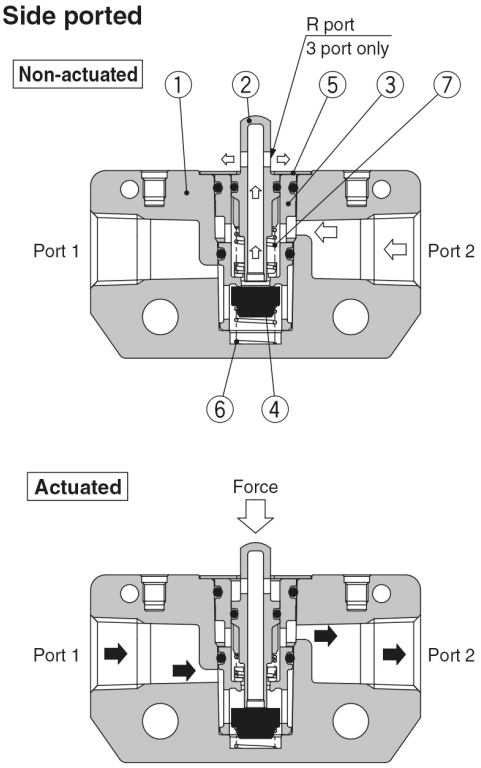


## Bottom ported

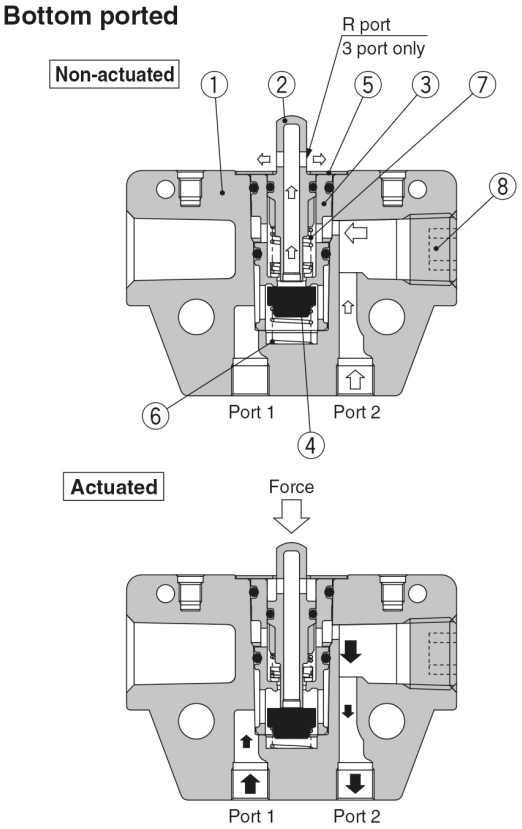


## Component Parts

| No. | Description | Material | Note | |
|---|---|---|---|---|
| 1 | **Valve** | ZDC | White coated | |
| 2 | **Plunger** | Polyacetal | 2 port | Grey |
| | | | 3 port | White |
| 3 | **Valve sheet** | PBT | | |
| 4 | **Valve** | NBR | | |

| No. | Description | Material | Note |
|---|---|---|---|
| 5 | **Plunger retainer** | Stainless steel | |
| 6 | **Spring** | Stainless steel | |
| 7 | **Spring** | Spring steel | |
| 8 | **Hexagon socket head taper plug** | Rolled steel | |

*Specifications are subject to change without prior notice and any obligation on the part of the manufacturer.*



**SMC CORPORATION** Zuazobidea 14, 01012, Vitoria-Gasteiz, Álava +34 945184100 +34 945184126 www.smc.eu support.marketingeurope@smc.com

## Additional information

| | |
|---|---|
| Catalogue | VM100-200-A_EU.pdf |
| Installation manuals | IM_VM100_TF2Z478EN-D.pdf |

Specifications are subject to change without prior notice and any obligation on the part of the manufacturer.



SMC CORPORATION Zuazobidea 14, 01012, Vitoria-Gasteiz, Álava +34 945184100 +34 945184126 www.smc.eu support.marketingeurope@smc.com