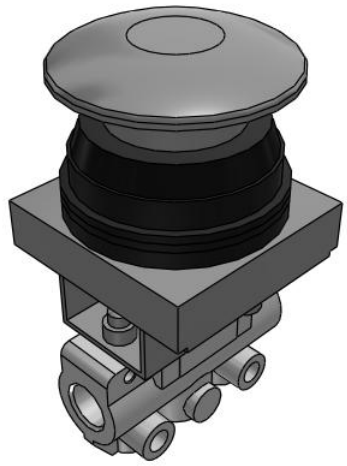

VM100, 100 Series 2/3 Port Mechanical Valve

VM120-F01-30BA

Datasheet

General series information

- Fluid: Air/Inert gas.
- Compact size.
- Piping options: Side ported, Bottom ported.
- Possible to choose mounting method with side ported.
- Variety of actuator types.

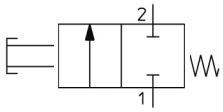

Directional control valve 2/2-way valve, closed normal position With a push control mechanism Return with mechanical control spring

Standard specifications

Bracket	None
Piping Direct., Plunger Length	0 (Side Ported Long)
Suffix	B (Black)
Number of Ports	2 Port
Actuator type	30 (Push Button, Mushroom)
Port Size	F01 (G 1/8) Side Ported Only
Body Option	Side Mounting
Indicator	None
Pressure medium	Air/Inert gas
Maximum temperature of pressure medium	60 ºC
Minimum temperature of pressure medium	-5 ºC (No freezing)
Maximum operating pressure	1.0 MPa
Minimum operating pressure	−100 kPa
Maximum ambient temperature	60 ºC
Minimum ambient temperature	-5 ºC (No freezing)
Pneumatic input connection	G 1/8
Pneumatic exhaust connection	G 1/8
Function in normal position	Closed

Specifications are subject to change without prior notice and any obligation on the part of the manufacturer.

SMC United Kingdom +34 945184126 sales@smc.uk

Type of piloting	Directly
Valve return	Mechanical spring
Flow rate	144 l/min
Critical pressure ratio	0.2
Sonic conductance dm3/(s·bar)	0.6
Actuation type	Manually
Weight	0.100 Kg

Specifications are subject to change without prior notice and any obligation on the part of the manufacturer.

SMC United Kingdom +34 945184126 sales@smc.uk

Dimensions

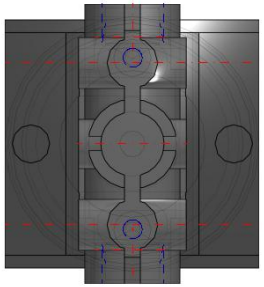

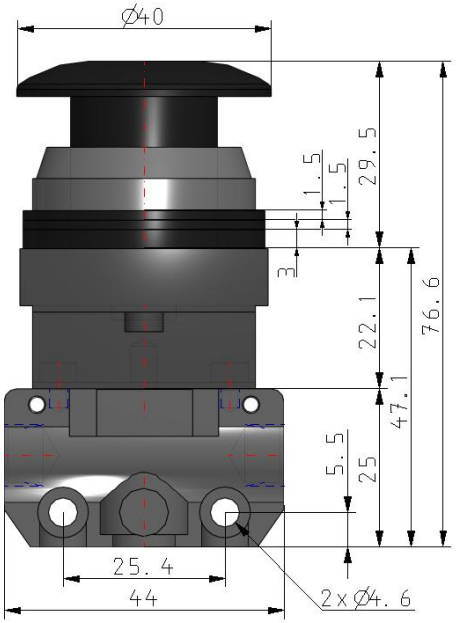

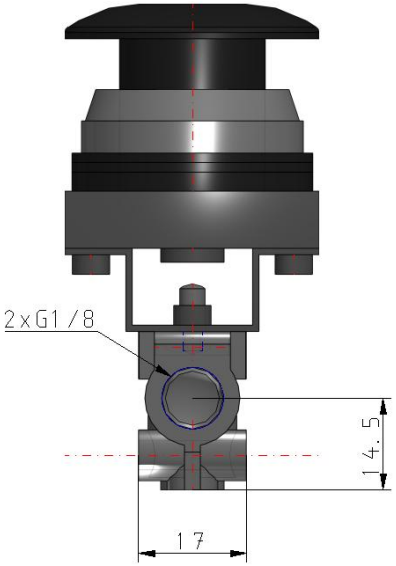

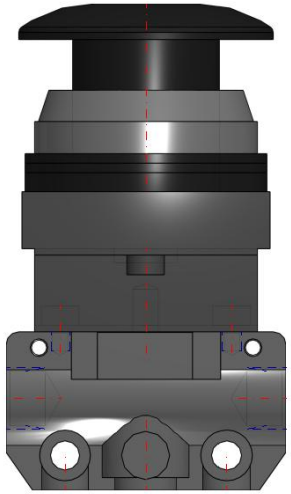

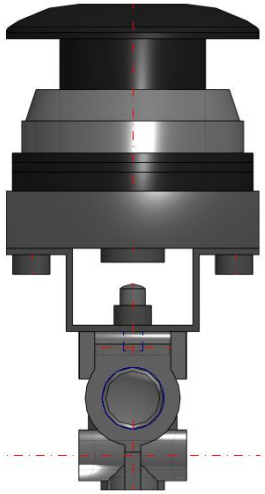

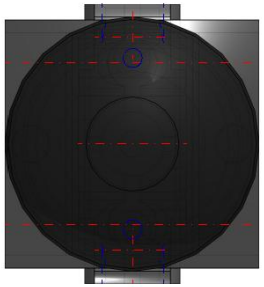

Specifications are subject to change without prior notice and any obligation on the part of the manufacturer.

Constructions

Side ported

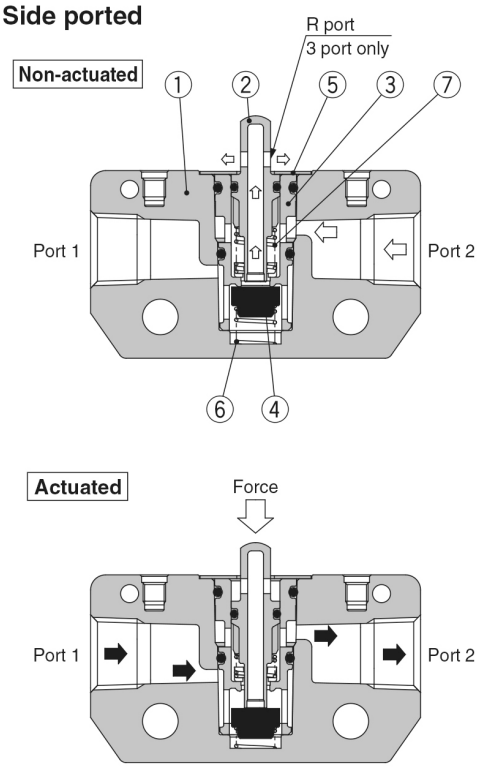

Bottom ported

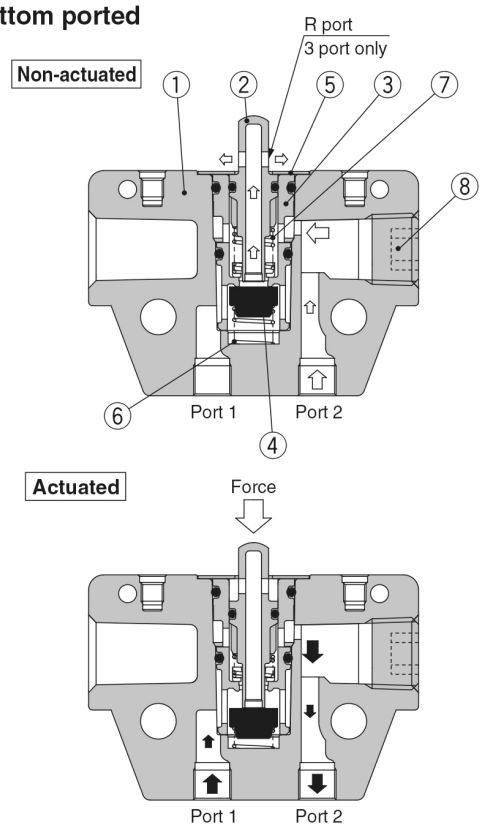

Component Parts

No.	Description	Material	Note	
1	**Valve**	ZDC	White coated	
2	**Plunger**	Polyacetal	2 port	Grey
			3 port	White
3	**Valve sheet**	PBT		
4	**Valve**	NBR		

No.	Description	Material	Note
5	**Plunger retainer**	Stainless steel	
6	**Spring**	Stainless steel	
7	**Spring**	Spring steel	
8	**Hexagon socket head taper plug**	Rolled steel	

Specifications are subject to change without prior notice and any obligation on the part of the manufacturer.

SMC United Kingdom +34 945184126 sales@smc.uk

Additional information

Catalogue	VM100-200-A_EU.pdf
Installation manuals	IM_VM100_TF2Z478EN-C.pdf

Specifications are subject to change without prior notice and any obligation on the part of the manufacturer.

SMC United Kingdom +34 945184126 sales@smc.uk