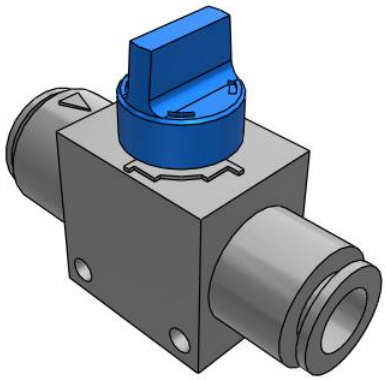

VHK-A, Finger Valve, One-touch Fitting

VHK3A-12F-10F

Datasheet

General series information

- 1(P)/2(A) One-touch fitting.

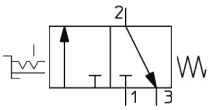

Directional control valve 3/2-way valve, closed normal position return with control mechanism by turning return with mechanical control spring

Standard specifications

Valve	3 (3 Port Valve)
1(P) Applicable Tubing O.D.	ø 12
2(A) Applicable Tubing O.D.	ø 10
Knob Colour	Grey (2-port); Blue (3-port)
Bracket	None
Pressure medium	Air
Maximum temperature of pressure medium	60 ºC
Minimum temperature of pressure medium	0 ºC
Maximum operating pressure	1.0 MPa
Minimum operating pressure	-100 kPa
Proof pressure	1.5 MPa
Maximum ambient temperature	60 ºC
Minimum ambient temperature	0 ºC
Usable tubing material	Nylon,Soft nylon,Polyurethane
Weight	0.031 Kg

Specifications are subject to change without prior notice and any obligation on the part of the manufacturer.

SMC CORPORATION Zuazobidea 14, 01012, Vitoria-Gasteiz, Álava +34 945184100 +34 945184126 www.smc.eu support.marketingeurope@smc.com

Dimensions

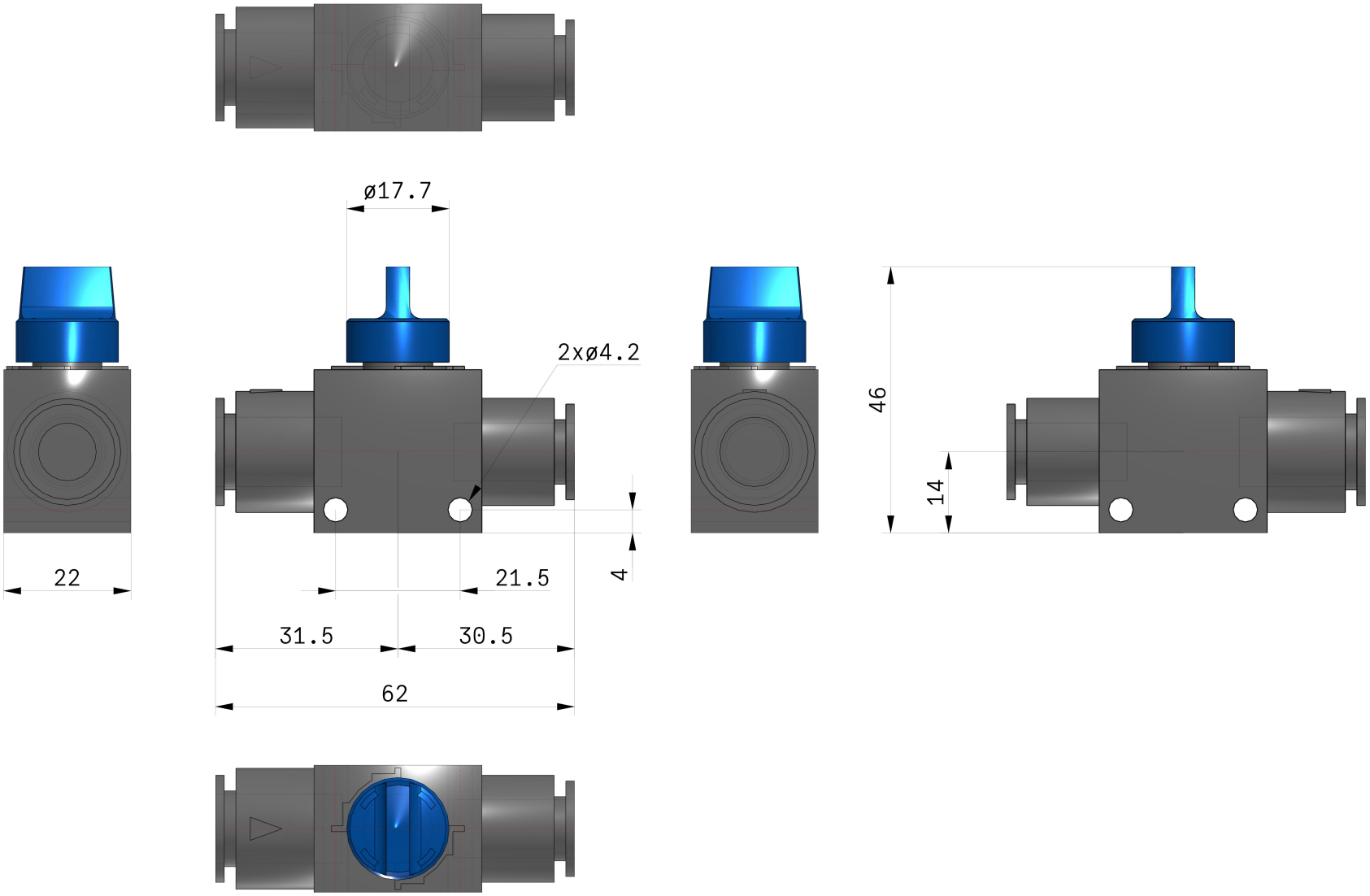

Specifications are subject to change without prior notice and any obligation on the part of the manufacturer.

SMC CORPORATION Zuazobidea 14, 01012, Vitoria-Gasteiz, Álava +34 945184100 +34 945184126 www.smc.eu support.marketingeurope@smc.com

Constructions

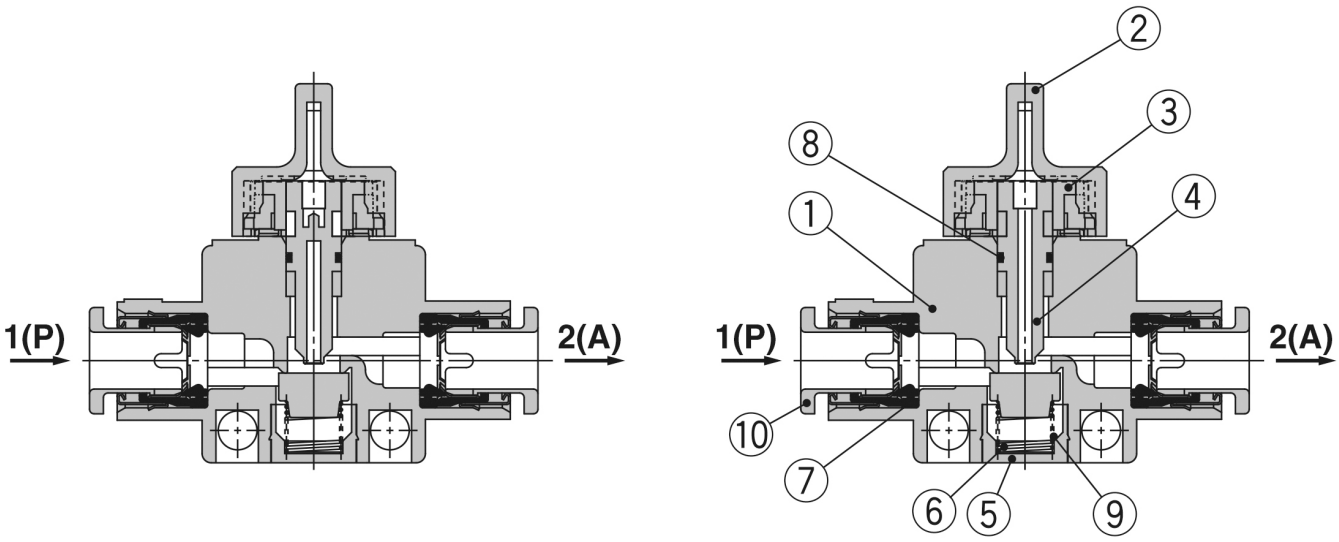

No.	Description	Material	Note
1	**Body**	PBT	
2	**Knob**	POM	
3	**Cam ring**	POM	
4	**Stem**	POM	
5	**Spring guide**	Brass	Electroless nickel plated
6	**Spring**	Stainless steel	
7	**Seal**	NBR	
8	**O-ring**	NBR	
9	**Valve**	NBR	
10	**Cassette**	—	

Specifications are subject to change without prior notice and any obligation on the part of the manufacturer.

SMC CORPORATION Zuazobidea 14, 01012, Vitoria-Gasteiz, Álava +34 945184100 +34 945184126 www.smc.eu support.marketingeurope@smc.com

Additional information

Catalogue	VHK-A_EU.pdf
Installation manuals	IM_VHK-A_TF223-100EN.pdf
Operation manuals	OM_VHK_OMZ0098EN-B.pdf

Specifications are subject to change without prior notice and any obligation on the part of the manufacturer.

SMC CORPORATION Zuazobidea 14, 01012, Vitoria-Gasteiz, Álava +34 945184100 +34 945184126 www.smc.eu support.marketingeurope@smc.com