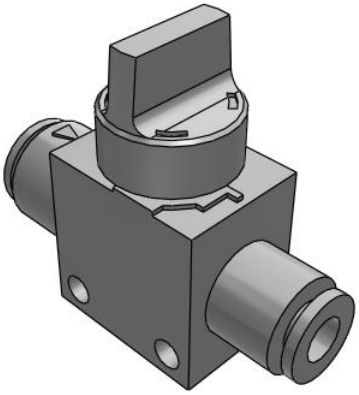

VHK-A, Finger Valve, One-touch Fitting

VHK2A-08F-06F

Datasheet

General series information

- 1(P)/2(A) One-touch fitting.

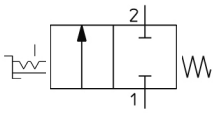

Directional control valve 2/2-way valve, closed normal position return with control mechanism by turning return with mechanical control spring

Standard specifications

1(P) Applicable Tubing O.D.	ø 8
Bracket	None
Valve	2 (2-Port Valve)
2(A) Applicable Tubing O.D.	ø 6
Knob Colour	Grey (2-port); Blue (3-port)
Pressure medium	Air
Maximum temperature of pressure medium	60 ºC
Minimum temperature of pressure medium	0 ºC
Maximum operating pressure	1.0 MPa
Minimum operating pressure	-100 kPa
Proof pressure	1.5 MPa
Maximum ambient temperature	60 ºC
Minimum ambient temperature	0 ºC
Usable tubing material	Nylon,Soft nylon,Polyurethane

Specifications are subject to change without prior notice and any obligation on the part of the manufacturer.

SMC United Kingdom +34 945184126 sales@smc.uk

Dimensions

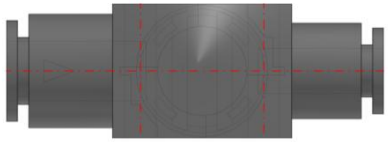

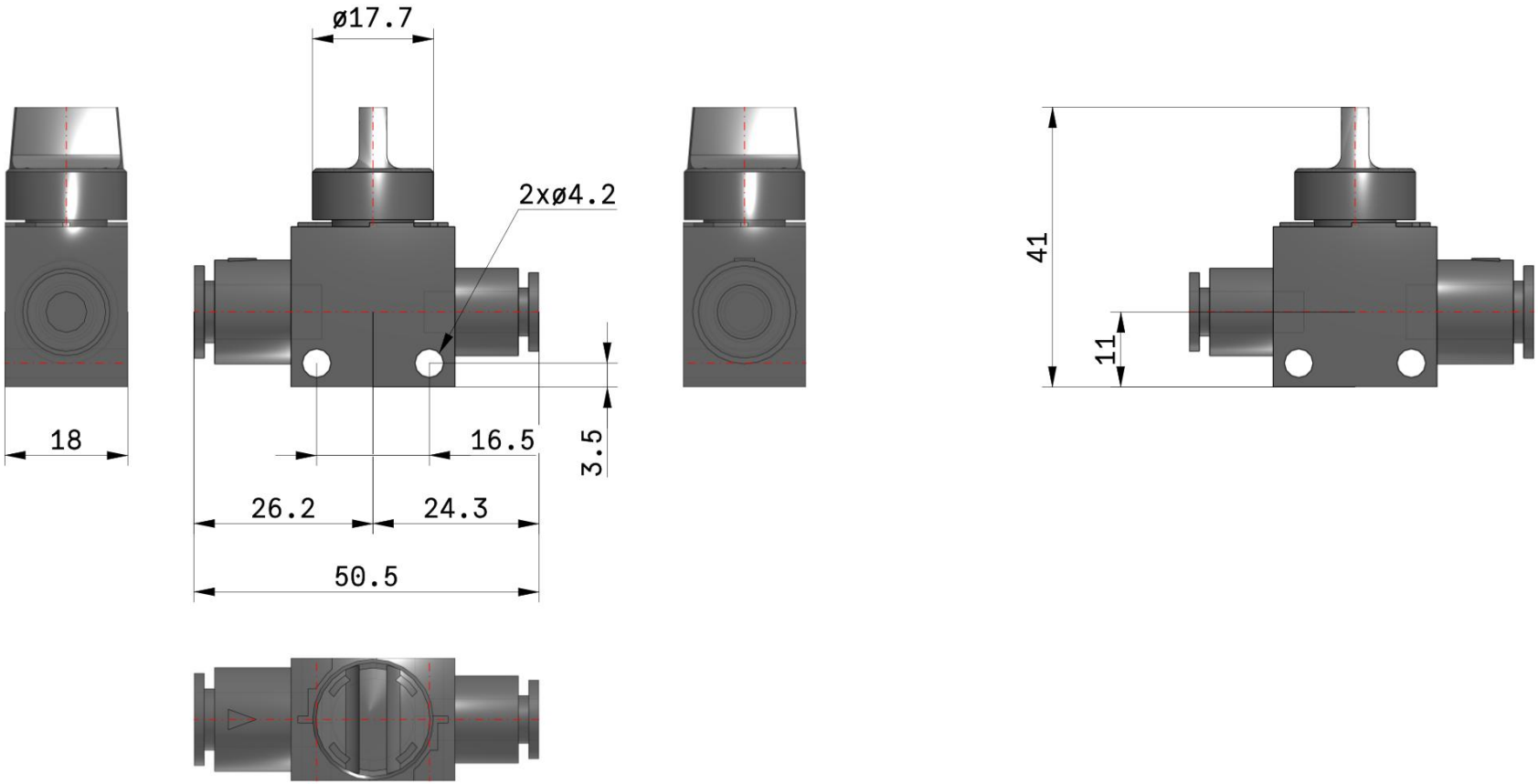

Specifications are subject to change without prior notice and any obligation on the part of the manufacturer.

Constructions

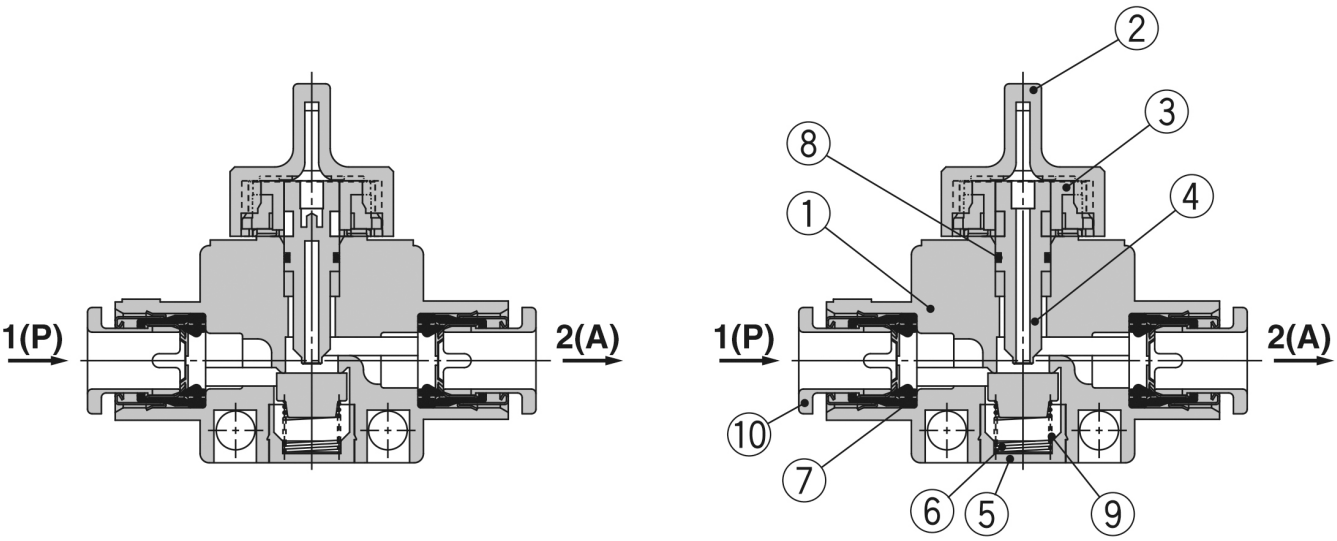

No.	Description	Material	Note
1	**Body**	PBT	
2	**Knob**	POM	
3	**Cam ring**	POM	
4	**Stem**	POM	
5	**Spring guide**	Brass	Electroless nickel plated
6	**Spring**	Stainless steel	
7	**Seal**	NBR	
8	**O-ring**	NBR	
9	**Valve**	NBR	
10	**Cassette**	—	

Specifications are subject to change without prior notice and any obligation on the part of the manufacturer.

SMC United Kingdom +34 945184126 sales@smc.uk

Additional information

Catalogue	VHK-Aa_EU.pdf

Specifications are subject to change without prior notice and any obligation on the part of the manufacturer.

SMC United Kingdom +34 945184126 sales@smc.uk