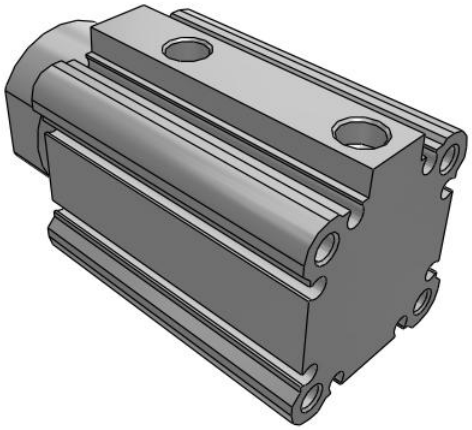

RS(D)Q-Z, Stopper Cylinder, Fixed Mounting Height

RSDQA32TF-20DZ

Datasheet

General series information

- Fixed Height Stopper Cylinder, Double / Single Acting
- Bore sizes (mm): 16, 20, 32, 40, 50
- Strokes up to 30 mm
- 10 rod end configurations available
- Compact auto switch mountable on 4 surfaces.

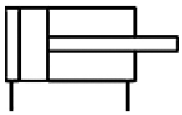

Double acting cylinders

Standard specifications

Mounting	A (Both Ends Tapped)
Bore Size	32 mm
Stroke	20 mm
Action	D (Double Acting)
Lead Wire or Prewired Connector	0.5m (Or None in the Case of No Switch)
Number	2 pcs. (Or None in the Case of No Switch)
Magnet	D (Built-in)
Port Thread	TF (Bore 20: M5 Thread, Bore 32 to 50: G)
Mounting Bolt	None
Rod End	Round Bar Style
Auto Switch	No Switch
Made to Order	None
Pressure medium	Air
Maximum operating pressure	1.0 MPa
Proof pressure	1.5 MPa
Maximum ambient temperature with magnet	60 °C
Minimum ambient temperature with magnet	-10 °C
Maximum piston speed	500 mm/s

Specifications are subject to change without prior notice and any obligation on the part of the manufacturer.

SMC United Kingdom +34 945184126 sales@smc.uk

Type of cushioning	Rubber bumper
Minimum piston speed	50 mm/s
Lubrication	Not required (Non-lube)
Stroke length tolerance	+1.4 0
Weight	0.450 Kg

Specifications are subject to change without prior notice and any obligation on the part of the manufacturer.

SMC United Kingdom +34 945184126 sales@smc.uk

Dimensions

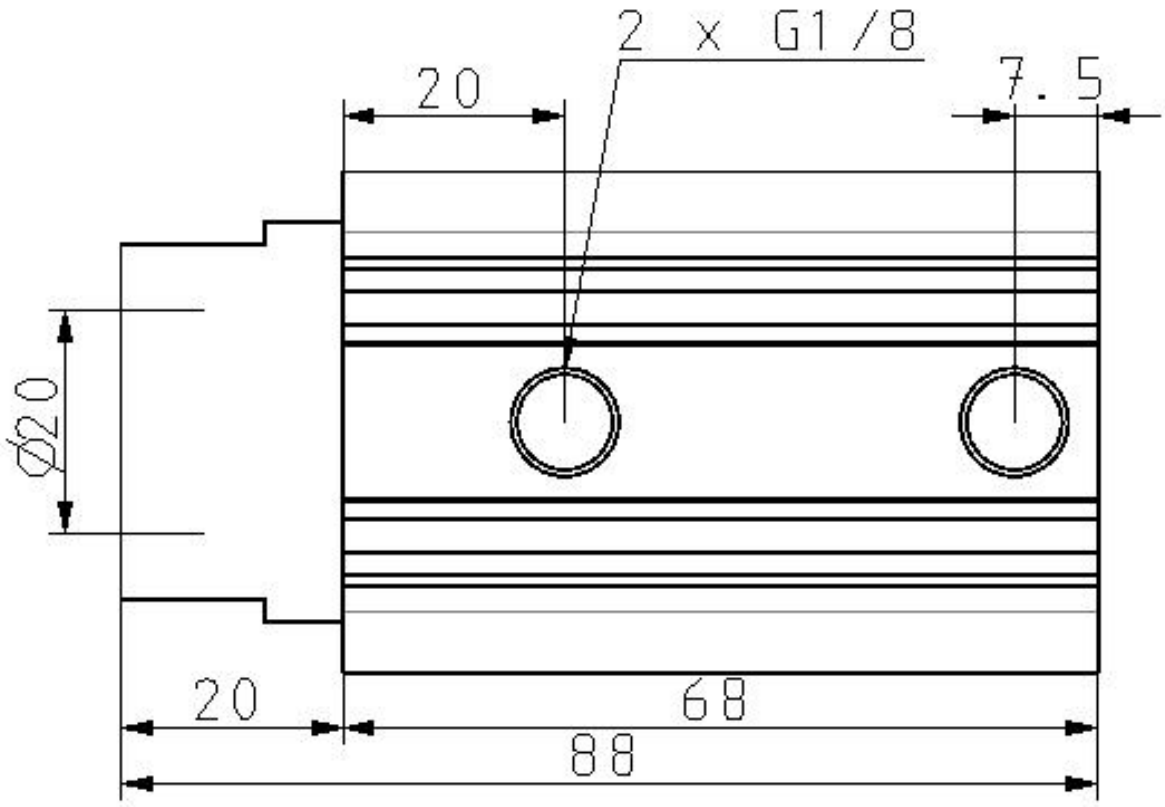

Specifications are subject to change without prior notice and any obligation on the part of the manufacturer.

SMC United Kingdom +34 945184126 sales@smc.uk

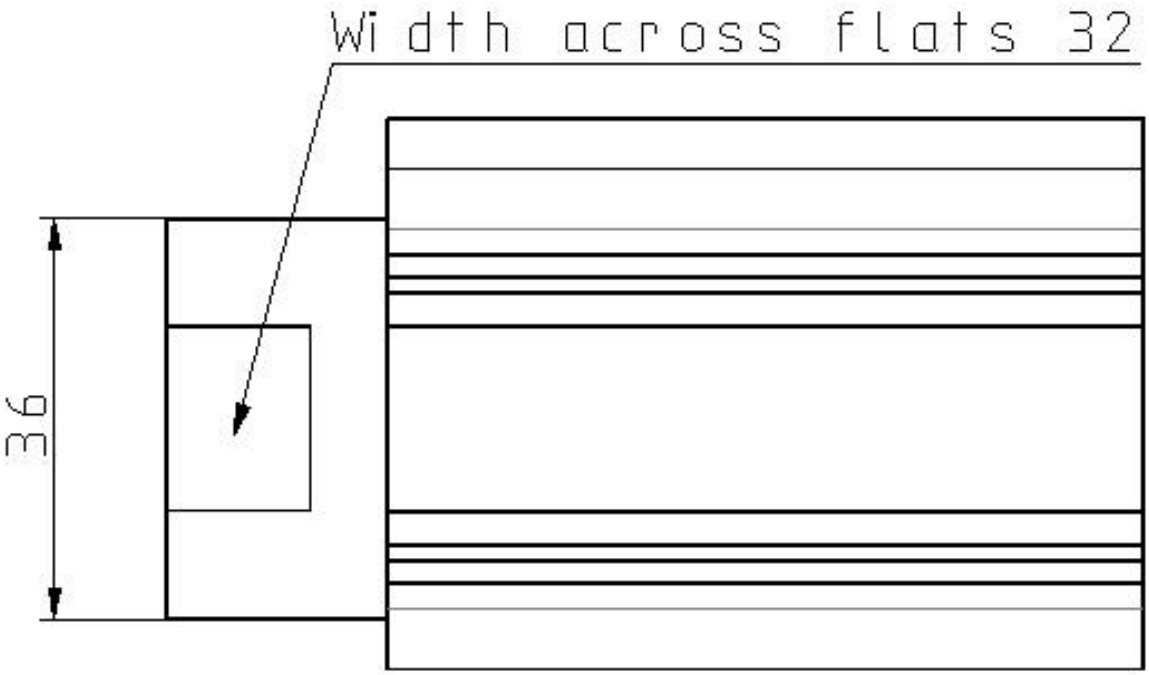

Specifications are subject to change without prior notice and any obligation on the part of the manufacturer.

SMC United Kingdom +34 945184126 sales@smc.uk

Constructions

Rod end configuration:

Round bar (—)

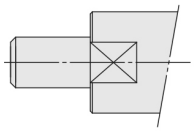

Round bar with female thread (F)

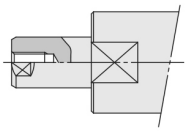

Chamfered (K)

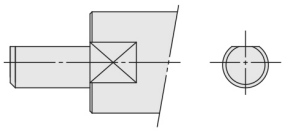

Chamfered with female thread (G)

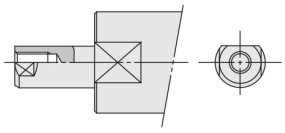

Lever (Fixed absorber type)
(Ø 32, Ø 40, Ø 50 only)

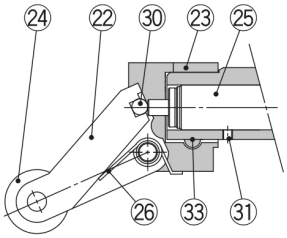

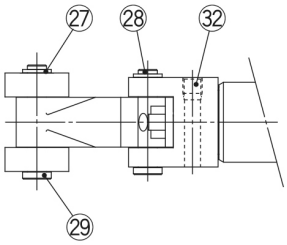

Lever (Adjustable absorber type)
(Ø 32, Ø 40, Ø 50 only)

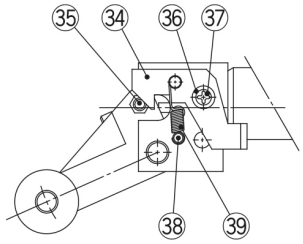

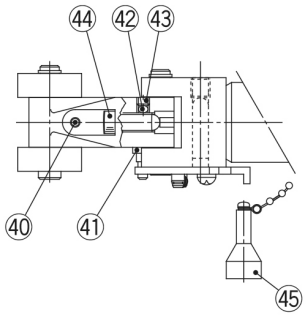

Only one roller is provided for Ø 32.

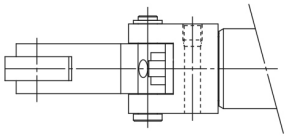

Component Parts

No.	Description	Material
22	**Lever**	Cast iron
23	**Lever holder**	Rolled steel
24	**Roller B**	Resin
25	**Shock absorber**	—
26	**Lever spring**	Stainless steel wire
27	**C retaining ring for axis**	Carbon tool steel
28	**Lever pin**	Carbon steel
29	**Roller pin**	Carbon steel
30	**Steel ball**	High carbon chrome bearing steel
31	**Hexagon socket head set screw**	Chromium molybdenum steel
32	**Hexagon socket head set screw**	Chromium molybdenum steel
33	**One-side tapered pin**	Carbon steel

No.	Description	Material
34	**Bracket**	Carbon steel
35	**Pin B**	Carbon steel
36	**Spacer**	Carbon steel
37	**Cross recessed round head screw**	Rolled steel
38	**Pin A**	Rolled steel
39	**Bracket spring**	Steel wire
40	**Hexagon socket head set screw**	Chromium molybdenum steel
41	**Spring washer**	Steel wire
42	**Urethane ball**	Urethane
43	**Hexagon socket head set screw**	Chromium molybdenum steel
44	**Adjustment bolt**	Bearing steel
45	**Cancel cap**	Aluminium alloy

Specifications are subject to change without prior notice and any obligation on the part of the manufacturer.

SMC United Kingdom +34 945184126 sales@smc.uk

Additional information

Catalogue	RSQ-A_EU.pdf
Operation manuals	OM_RSQ_OM0080EN-Q.pdf

Specifications are subject to change without prior notice and any obligation on the part of the manufacturer.

SMC United Kingdom +34 945184126 sales@smc.uk