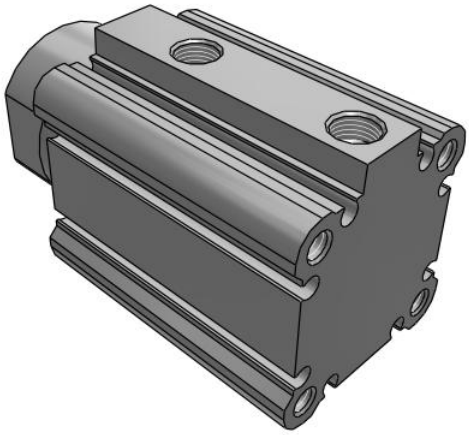

RS(D)Q-Z, Stopper Cylinder, Fixed Mounting Height

RSDQA32TF-15DZ

Datasheet

General series information

- Fixed Height Stopper Cylinder, Double / Single Acting
- Bore sizes (mm): 16, 20, 32, 40, 50
- Strokes up to 30 mm
- 10 rod end configurations available
- Compact auto switch mountable on 4 surfaces.

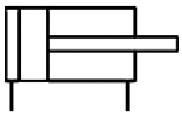

Double acting cylinders

Standard specifications

Magnet	D (Built-in)
Mounting	A (Both Ends Tapped)
Bore Size	32 mm
Port Thread	TF (Bore 20: M5 Thread, Bore 32 to 50: G)
Stroke	15 mm
Action	D (Double Acting)
Rod End	Round Bar Style
Mounting Bolt	None
Auto Switch	No Switch
Lead Wire or Pre-wired Connector	0.5 m (Or None in the Case of No Switch)
Number	2 pcs. (Or None in Case of No Switch)
Made to Order	None
Pressure medium	Air
Maximum operating pressure	1.0 MPa
Proof pressure	1.5 MPa
Maximum ambient temperature with magnet	60 °C
Minimum ambient temperature with magnet	-10 °C
Maximum piston speed	500 mm/s

Specifications are subject to change without prior notice and any obligation on the part of the manufacturer.

SMC CORPORATION Zuazobidea 14, 01012, Vitoria-Gasteiz, Álava +34 945184100 +34 945184126 www.smc.eu support.marketingeurope@smc.com

Type of cushioning	Rubber bumper
Minimum piston speed	50 mm/s
Lubrication	Not required (Non-lube)
Stroke length tolerance	+1.4 0

Specifications are subject to change without prior notice and any obligation on the part of the manufacturer.

SMC CORPORATION Zuazobidea 14, 01012, Vitoria-Gasteiz, Álava +34 945184100 +34 945184126 www.smc.eu support.marketingeurope@smc.com

Dimensions

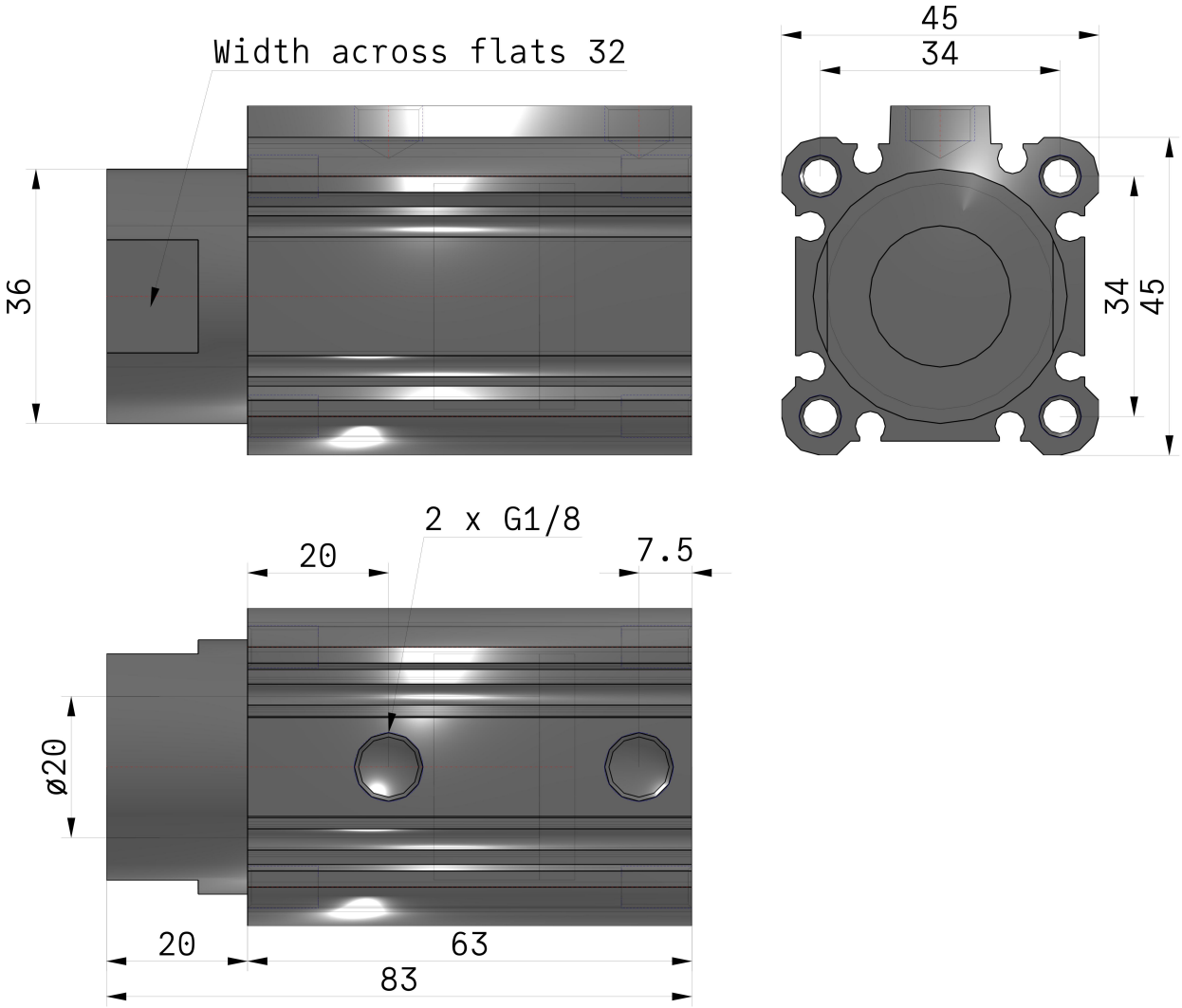

Specifications are subject to change without prior notice and any obligation on the part of the manufacturer.

SMC CORPORATION Zuazobidea 14, 01012, Vitoria-Gasteiz, Álava +34 945184100 +34 945184126 www.smc.eu support.marketingeurope@smc.com

Constructions

Rod end configuration:

Round bar (—)

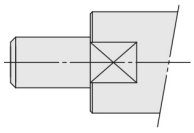

Round bar with female thread (F)

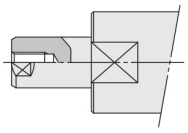

Chamfered (K)

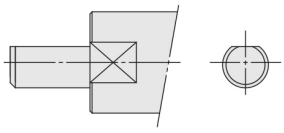

Chamfered with female thread (G)

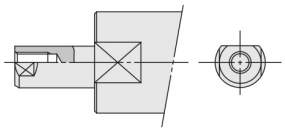

Lever (Fixed absorber type)
(Ø 32, Ø 40, Ø 50 only)

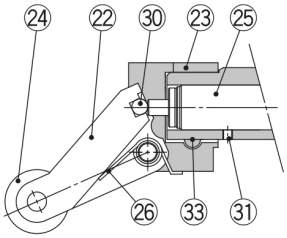

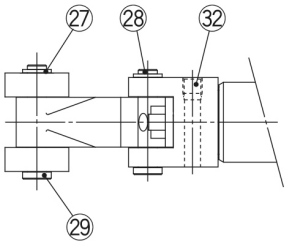

Lever (Adjustable absorber type)
(Ø 32, Ø 40, Ø 50 only)

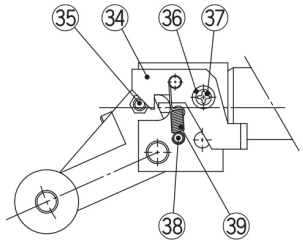

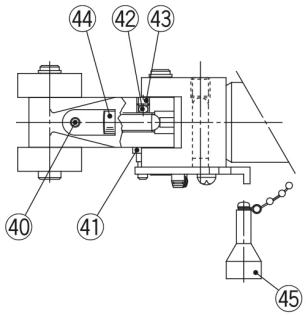

Only one roller is provided for Ø 32.

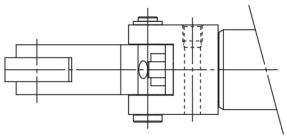

Component Parts

No.	Description	Material
22	**Lever**	Cast iron
23	**Lever holder**	Rolled steel
24	**Roller B**	Resin
25	**Shock absorber**	—
26	**Lever spring**	Stainless steel wire
27	**C retaining ring for axis**	Carbon tool steel
28	**Lever pin**	Carbon steel
29	**Roller pin**	Carbon steel
30	**Steel ball**	High carbon chrome bearing steel
31	**Hexagon socket head set screw**	Chromium molybdenum steel
32	**Hexagon socket head set screw**	Chromium molybdenum steel
33	**One-side tapered pin**	Carbon steel

No.	Description	Material
34	**Bracket**	Carbon steel
35	**Pin B**	Carbon steel
36	**Spacer**	Carbon steel
37	**Cross recessed round head screw**	Rolled steel
38	**Pin A**	Rolled steel
39	**Bracket spring**	Steel wire
40	**Hexagon socket head set screw**	Chromium molybdenum steel
41	**Spring washer**	Steel wire
42	**Urethane ball**	Urethane
43	**Hexagon socket head set screw**	Chromium molybdenum steel
44	**Adjustment bolt**	Bearing steel
45	**Cancel cap**	Aluminium alloy

Specifications are subject to change without prior notice and any obligation on the part of the manufacturer.

SMC CORPORATION Zuazobidea 14, 01012, Vitoria-Gasteiz, Álava +34 945184100 +34 945184126 www.smc.eu support.marketingeurope@smc.com

Additional information

Catalogue	RSQ-A_EU.pdf
Operation manuals	OM_RSQ_OM0080EN-Q.pdf

Specifications are subject to change without prior notice and any obligation on the part of the manufacturer.

SMC CORPORATION Zuazobidea 14, 01012, Vitoria-Gasteiz, Álava +34 945184100 +34 945184126 www.smc.eu support.marketingeurope@smc.com