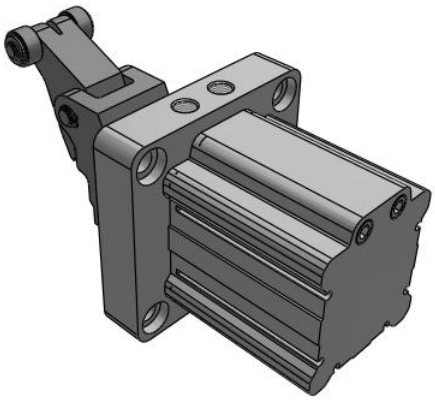

RS2H, Heavy Duty Stopper Cylinder
RS2H63TF-30DM-D

Datasheet

General series information

- Heavy duty stopper cylinder
- Bore sizes (mm): 50, 63, 80
- Piping available from 2 directions
- Mounting type: flange
- Variety of options available

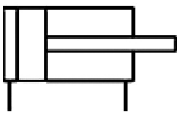

Double-Acting Cylinders

Standard specifications

Bore Size	63mm
Port Thread	TF (G Thread)
Piping	Flange Side
Stroke	30mm (RS2H50,63)
Action	D (Double Acting)
Roller Material	M (Carbon Steel)
Option	D (Locking Mechanism)
Port and Lever Position	0°
Shock Absorber	Standard
Auto Switch	No Switch
Lead Wire or Prewired Connector	0.5m (Or None in the Case of No Switch)
Number	2 pcs. (Or None in Case of No Switch)
Made to Order	Standard
Maximum operating pressure	1 MPa
Proof pressure	1.5 MPa
Maximum ambient temperature	60 ºC
Minimum ambient temperature	-10 ºC (No freezing)
Conform to the European RoHS Directive	Conform

Specifications are subject to change without prior notice and any obligation on the part of the manufacturer.

SMC CORPORATION Zuazobidea 14, 01012, Vitoria-Gasteiz, Álava +34 945184100 +34 945184126 www.smc.eu support.marketingeurope@smc.com

Type of cushioning	Rubber bumper
Port size	1/4
Lubrication	Non Lube
Stroke length tolerance	± 0 ~ 1.4 mm
F450 - Mounting	Flange
Action	Double Acting

Specifications are subject to change without prior notice and any obligation on the part of the manufacturer.

SMC CORPORATION Zuazobidea 14, 01012, Vitoria-Gasteiz, Álava +34 945184100 +34 945184126 www.smc.eu support.marketingeurope@smc.com

Dimensions

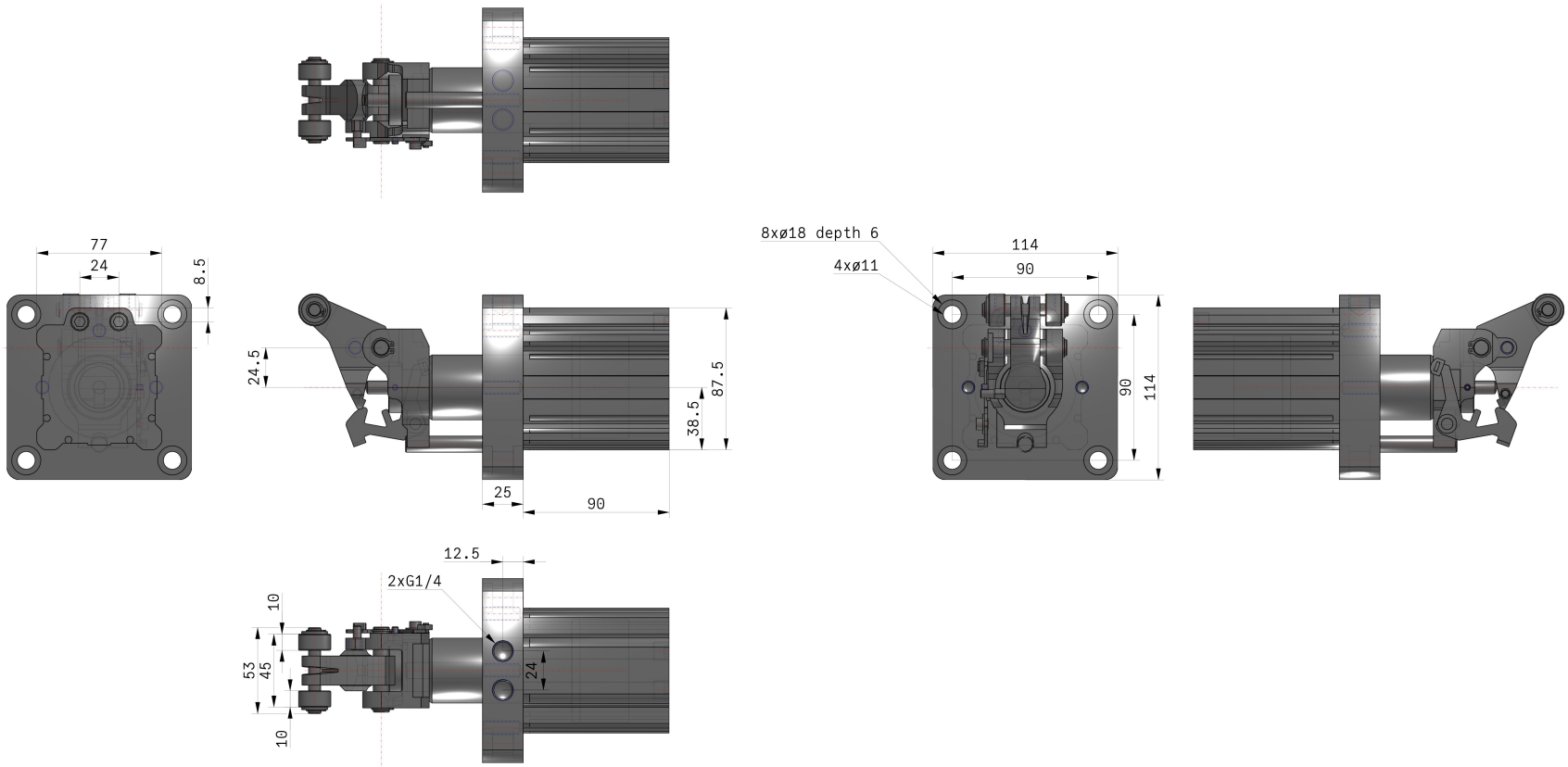

Specifications are subject to change without prior notice and any obligation on the part of the manufacturer.

SMC CORPORATION Zuazobidea 14, 01012, Vitoria-Gasteiz, Álava +34 945184100 +34 945184126 www.smc.eu support.marketingeurope@smc.com

Constructions

Construction

Double acting (DL, DM)

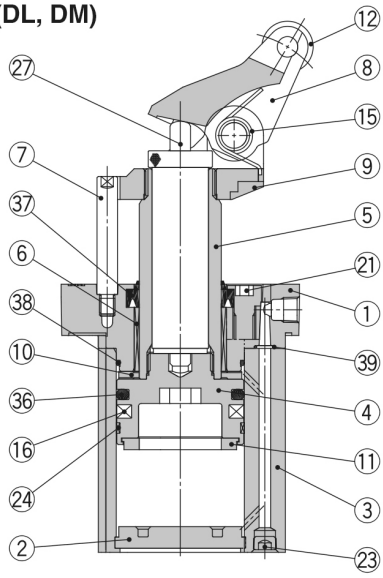

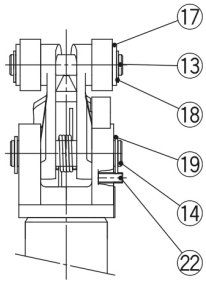

Double acting spring type (BL, BM)

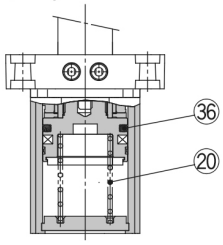

Single acting (TL, TM)

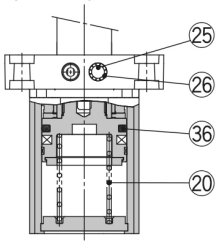

Options (With lock mechanism and cancel cap)

With lock mechanism (-D)

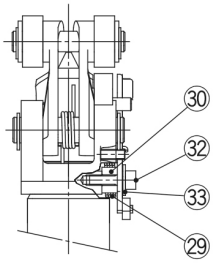

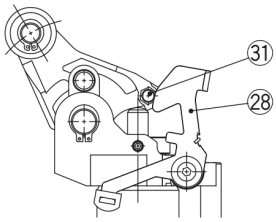

When cancel cap is used (-C)

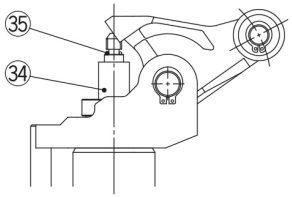

Component Parts

No.	Description	Material	Note
1	**Rod cover**	Aluminum alloy	Metallic painted
2	**Bottom plate**	Aluminum alloy	Hard anodized
3	**Cylinder tube**	Aluminum alloy	Hard anodized
4	**Piston**	Aluminum alloy	Chromated
5	**Piston rod**	Carbon steel	Hard chrome plated
6	**Bushing**	Bearing alloy	
7	**Guide rod**	Carbon Steel	Hard chrome plated
8	**Lever**	Cast iron	Zinc chromated
9	**Lever holder**	Cast iron	Zinc chromated
10	**Bumper A**	Urethane	
11	**Bumper B**	Urethane	
12	**Roller**	Resin	-□□L
		Carbon steel	-□□M
13	**Roller pin**	Carbon steel	
14	**Lever pin**	Carbon steel	
15	**Lever spring**	Steel wire	
16	**Magnet**	—	
17	**Flat washer**	Steel wire	Zinc chromated
18	Type C retaining ring for shaft	Carbon tool steel	
19	Type C retaining ring for shaft	Carbon tool steel	
20	**Return spring**	Steel wire	-T□/-B□
21	Hexagon socket head cap screw	Chrome molybdenum steel	Zinc chromated
22	Hexagon socket head set screw	Chrome molybdenum steel	Zinc chromated
23	Hexagon socket head plug	Carbon steel	Zinc chromated
24	**Wear ring**	Resin	
25	**Element**	Bronze	-□TL/-□TM
26	**Retaining ring**	Carbon tool steel	-□TL/-□TM
27	**Shock absorber**	—	
28	**Bracket assembly**	Carbon steel	Used for -D (Lock type)

Component Parts

No.	Description	Material	Note
29	**Bracket spring**	Steel wire	Used for -D (Lock type)
30	**Bracket spacer**	Carbon steel	Used for -D (Lock type)
31	**Lock pin**	Carbon steel	Used for -D (Lock type)
32	Hexagon socket head cap screw	Chrome molybdenum steel	Used for -D (Lock type)
33	**Flat washer**	Carbon steel	Used for -D (Lock type)
34	**Cancel cap**	Aluminum alloy	Used for -C (Cancel cap type)
35	**O-ring**	NBR	Used for -C (Cancel cap type)
36	**Piston seal**	NBR	
37	**Rod seal**	NBR	
38	**Tube gasket**	NBR	
39	**O-ring**	NBR	

Replacement Parts/Seal Kit

Bore size (mm)	Kit no.			Contents
	Double acting	Double acting spring type	Single acting	
50	RS2H50D-PS	RS2H50T-PS		Set of nos. above ㊱ to ㊴ (excluding ㊲)
63	RS2H63D-PS	RS2H63T-PS		
80	RS2H80D-PS	RS2H80T-PS		

∗Seal kit includes ㊱ to ㊴ (excluding ㊲).
Order the seal kit based on each bore size.
∗Since the seal kit does not include a grease pack, order it separately.
Grease pack part no.: GR-S-010 (10 g)

Replacement Parts/Shock Absorber

Bore size (mm)	Order no.
50	RS2H-R50
63	RS2H-R63
80	RS2H-R80

Specifications are subject to change without prior notice and any obligation on the part of the manufacturer.

SMC CORPORATION Zuazobidea 14, 01012, Vitoria-Gasteiz, Álava +34 945184100 +34 945184126 www.smc.eu support.marketingeurope@smc.com

Additional information

Catalogue	RS2H-A_EU.pdf
Operation manuals	OM_RS2H_OM0012PEN-B.pdf

Specifications are subject to change without prior notice and any obligation on the part of the manufacturer.

SMC CORPORATION Zuazobidea 14, 01012, Vitoria-Gasteiz, Álava +34 945184100 +34 945184126 www.smc.eu support.marketingeurope@smc.com