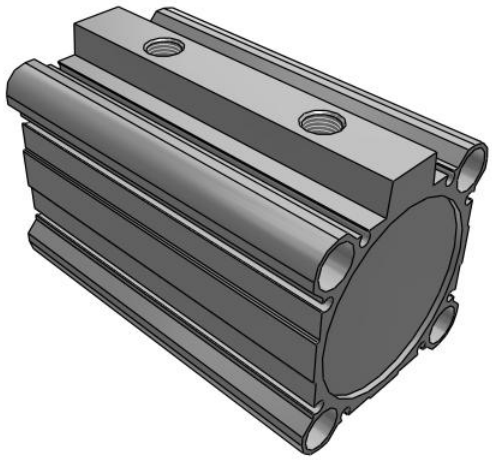

R(D)Q, Compact Cylinder, Air Cushion

RDQB63TF-75

Datasheet

General series information

- Unique air cushion construction with no cushion ring.
- Wide size variations from ø20 to ø100.
- Nearly three times the allowable kinetic energy.
- Improved noise reduction (Stroke end impact noise reduced) and repeatability.
- Interchangeable mounting.

Standard specifications

Magnet	D (Built-in Magnet)
Mounting	B (Through-Hole (Standard)
Bore Size	63 mm
Port Thread	TF (G)
Stroke	75
Body Option	Rod End Female Thread (Standard)
Auto Switch	No Switch
Lead Wire or Pre-wired Connector	0.5 m (Or None in the Case of No Switch)
Number	2 pcs. (Or None in Case of No Switch)
Maximum operating pressure	1.0 MPa
Minimum operating pressure	0.05 MPa
Proof pressure	1.5 MPa
Maximum piston speed	500 mm/s
Type of cushioning	Pneumatic (non-lube) type
Female thread of rod end	Female threads
Minimum piston speed	50 mm/s
Fluid	Air
Ambient and fluid temperature	–10ºC to 70°C (with no freezing)

Specifications are subject to change without prior notice and any obligation on the part of the manufacturer.

SMC CORPORATION Zuazobidea 14, 01012, Vitoria-Gasteiz, Álava +34 945184100 +34 945184126 www.smc.eu support.marketingeurope@smc.com

Stroke length tolerance	+1.0 0
F449 - Rod_end_thread_tolerance	JIS class 2
F450 - Mounting	Through hole
Weight	1.319 Kg

Specifications are subject to change without prior notice and any obligation on the part of the manufacturer.

SMC CORPORATION Zuazobidea 14, 01012, Vitoria-Gasteiz, Álava +34 945184100 +34 945184126 www.smc.eu support.marketingeurope@smc.com

Dimensions

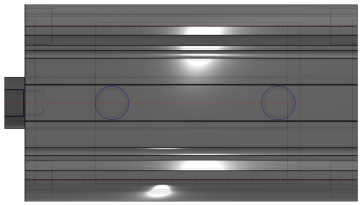

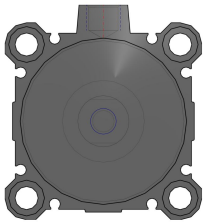

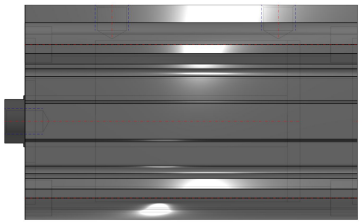

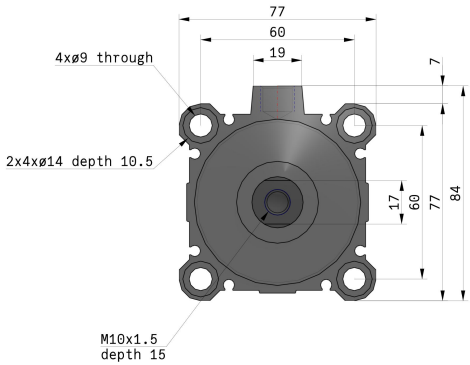

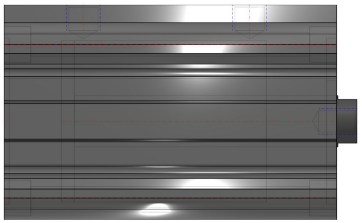

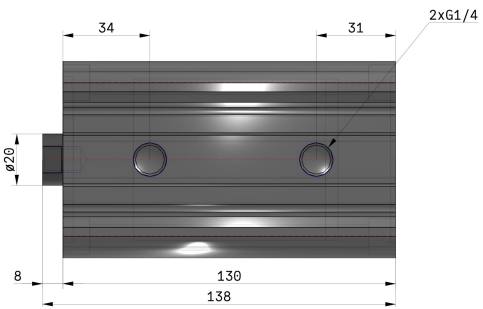

Specifications are subject to change without prior notice and any obligation on the part of the manufacturer.

SMC CORPORATION Zuazobidea 14, 01012, Vitoria-Gasteiz, Álava +34 945184100 +34 945184126 www.smc.eu support.marketingeurope@smc.com

Additional information

Catalogue	RQ-B_EU.pdf
Operation manuals	RQ_OP_Manual_RQxx-OM0002G.pdf

Specifications are subject to change without prior notice and any obligation on the part of the manufacturer.

SMC CORPORATION Zuazobidea 14, 01012, Vitoria-Gasteiz, Álava +34 945184100 +34 945184126 www.smc.eu support.marketingeurope@smc.com