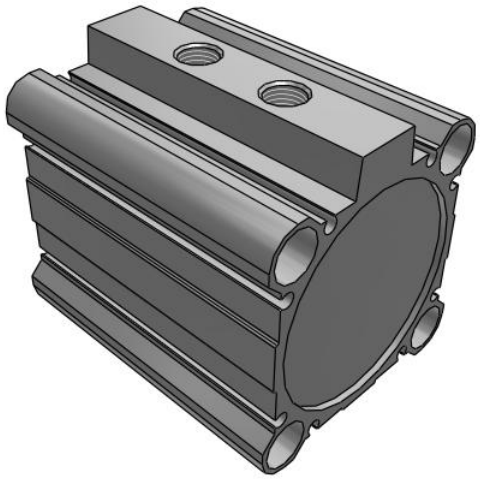

# R(D)Q, Compact Cylinder, Air Cushion

## RDQB63TF-40

Datasheet

## General series information

- Unique air cushion construction with no cushion ring.
- Wide size variations from ø20 to ø100.
- Nearly three times the allowable kinetic energy.
- Improved noise reduction (Stroke end impact noise reduced) and repeatability.
- Interchangeable mounting.

## Standard specifications

| | |
|---|---|
| Magnet | D (Built-in Magnet) |
| Mounting | B [Through Hole (Standard)] |
| Bore Size | 63 mm |
| Port Thread | TF (G) |
| Stroke | 40 |
| Body Option | Rod End Female Threads (Standard) |
| Auto Switch | No Switch |
| Lead Wire or Prewired Connector | 0.5m (Or None in the Case of No Switch) |
| Number | 2 pcs. (Or None in the Case of No Switch) |
| Maximum operating pressure | 1.0 MPa |
| Minimum operating pressure | 0.05 MPa |
| Proof pressure | 1.5 MPa |
| Maximum piston speed | 500 mm/s |
| Type of cushioning | Pneumatic (non-lube) type |
| Female thread of rod end | Female threads |
| Minimum piston speed | 50 mm/s |
| Fluid | Air |
| Ambient and fluid temperature | –10ºC to 70°C (with no freezing) |

Specifications are subject to change without prior notice and any obligation on the part of the manufacturer.



SMC CORPORATION Zuazobidea 14, 01012, Vitoria-Gasteiz, Álava +34 945184100 +34 945184126 www.smc.eu support.marketingeurope@smc.com

| | |
|---|---|
| Stroke length tolerance | +1.0<br>0 |
| F449 - Rod_end_thread_tolerance | JIS class 2 |
| F450 - Mounting | Through hole |
| Weight | 1.041 Kg |

Specifications are subject to change without prior notice and any obligation on the part of the manufacturer.



SMC CORPORATION Zuazobidea 14, 01012, Vitoria-Gasteiz, Álava +34 945184100 +34 945184126 www.smc.eu support.marketingeurope@smc.com

# Dimensions

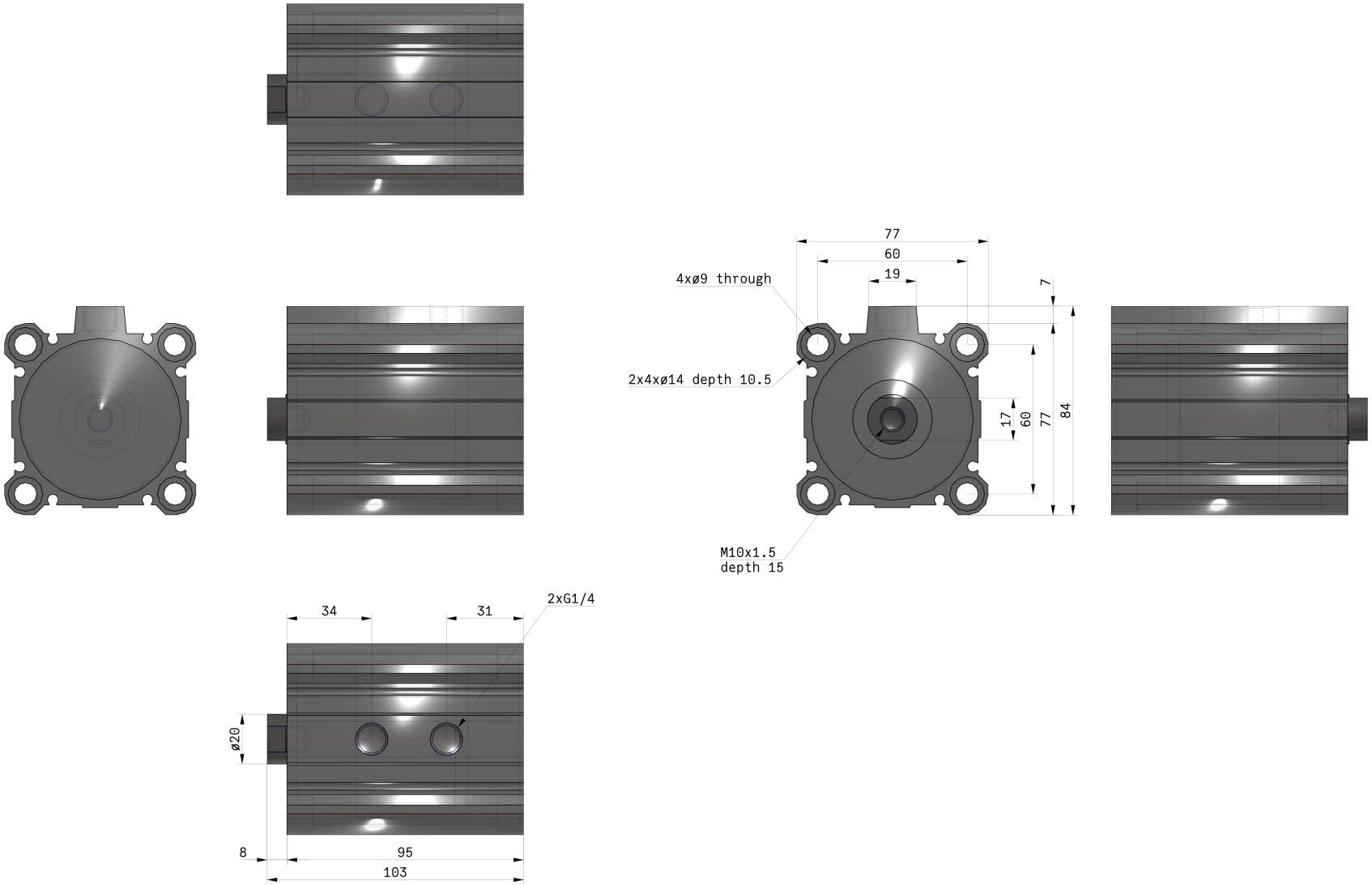


Specifications are subject to change without prior notice and any obligation on the part of the manufacturer.



SMC CORPORATION Zuazobidea 14, 01012, Vitoria-Gasteiz, Álava +34 945184100 +34 945184126 www.smc.eu support.marketingeurope@smc.com

## Additional information

| | |
|---|---|
| Catalogue | RQ_EU.pdf |
| Operation manuals | RQ_OP_Manual_RQxx-OM0002G.pdf |

Specifications are subject to change without prior notice and any obligation on the part of the manufacturer.



SMC CORPORATION Zuazobidea 14, 01012, Vitoria-Gasteiz, Álava +34 945184100 +34 945184126 www.smc.eu support.marketingeurope@smc.com