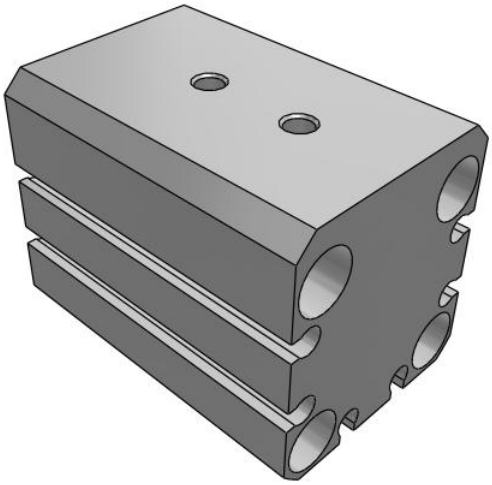

R(D)Q, Compact Cylinder, Air Cushion

RDQB20-20

Datasheet

General series information

- Unique air cushion construction with no cushion ring.
- Wide size variations from ø20 to ø100.
- Nearly three times the allowable kinetic energy.
- Improved noise reduction (Stroke end impact noise reduced) and repeatability.
- Interchangeable mounting.

Standard specifications

Mounting	B [Through Hole (Standard)]
Bore Size	20 mm
Stroke	20
Number	2 pcs. (Or None in Case of No Switch)
Magnet	D (Built-in Magnet)
Port Thread	M Thread [ø20-ø25]; Rc [ø32-ø100]
Lead Wire or Pre-wired Connector	0.5 m (Or None in the Case of No Switch)
Auto Switch	No Switch
Body Option	Rod End Female Thread (Standard)
Maximum operating pressure	1.0 MPa
Minimum operating pressure	0.05 MPa
Proof pressure	1.5 MPa
Maximum piston speed	500 mm/s
Type of cushioning	Pneumatic (non-lube) type
Female thread of rod end	Female threads
Minimum piston speed	50 mm/s
Fluid	Air
Ambient and fluid temperature	–10ºC to 70°C (with no freezing)

Specifications are subject to change without prior notice and any obligation on the part of the manufacturer.

SMC United Kingdom +34 945184126 sales@smc.uk

Stroke length tolerance	+1.0 0
F449 - Rod_end_thread_tolerance	JIS class 2
F450 - Mounting	Through hole
Weight	0.168 Kg

Specifications are subject to change without prior notice and any obligation on the part of the manufacturer.

SMC United Kingdom +34 945184126 sales@smc.uk

Dimensions

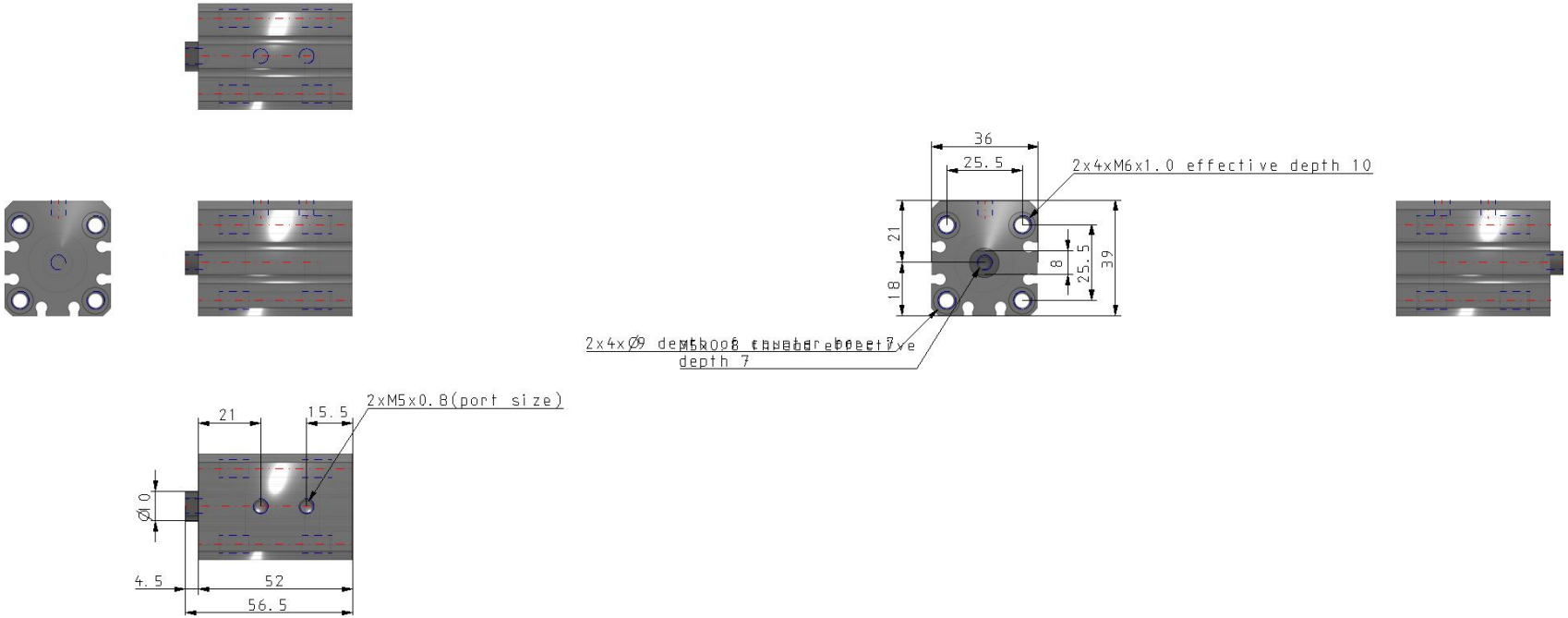

Specifications are subject to change without prior notice and any obligation on the part of the manufacturer.

SMC United Kingdom +34 945184126 sales@smc.uk

Additional information

Catalogue	RQ-B_EU.pdf
Operation manuals	RQ_OP_Manual_RQxx-OM0002G.pdf

Specifications are subject to change without prior notice and any obligation on the part of the manufacturer.

SMC United Kingdom +34 945184126 sales@smc.uk