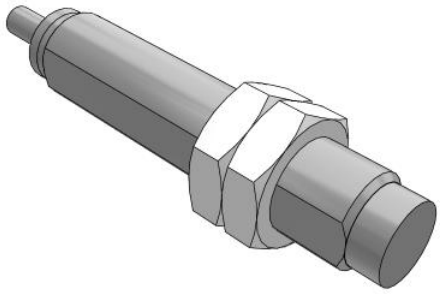

RB, Shock Absorber
RB1411

Datasheet

General series information

- Shock absorber type: basic or with cap
- Applicable thread O.D. size: M6, M8, M10, M14, M20, M27
- Option: stopper nut

Standard specifications

Stroke	11 mm
With Cap	w/o Cap
Port Size	M14XP1.5
Style	Standard
Option	Hex Nut: 2 pcs.; No Stopper Nut
Construction	2118_en.jpg
Max. Allowable Thrust	814 N
F124- Max-operating-frequency	45
Max. Absorbed Energy	14.7 J
Operating temperature range	-10 - 80ºC
Impact speed	0.05 - 5 m/s
Spring_Force_compressed	15.3 N
Spring_Force_extended	6.86 N
Weight	0.069 Kg

Specifications are subject to change without prior notice and any obligation on the part of the manufacturer.

SMC United Kingdom +34 945184126 sales@smc.uk

Dimensions

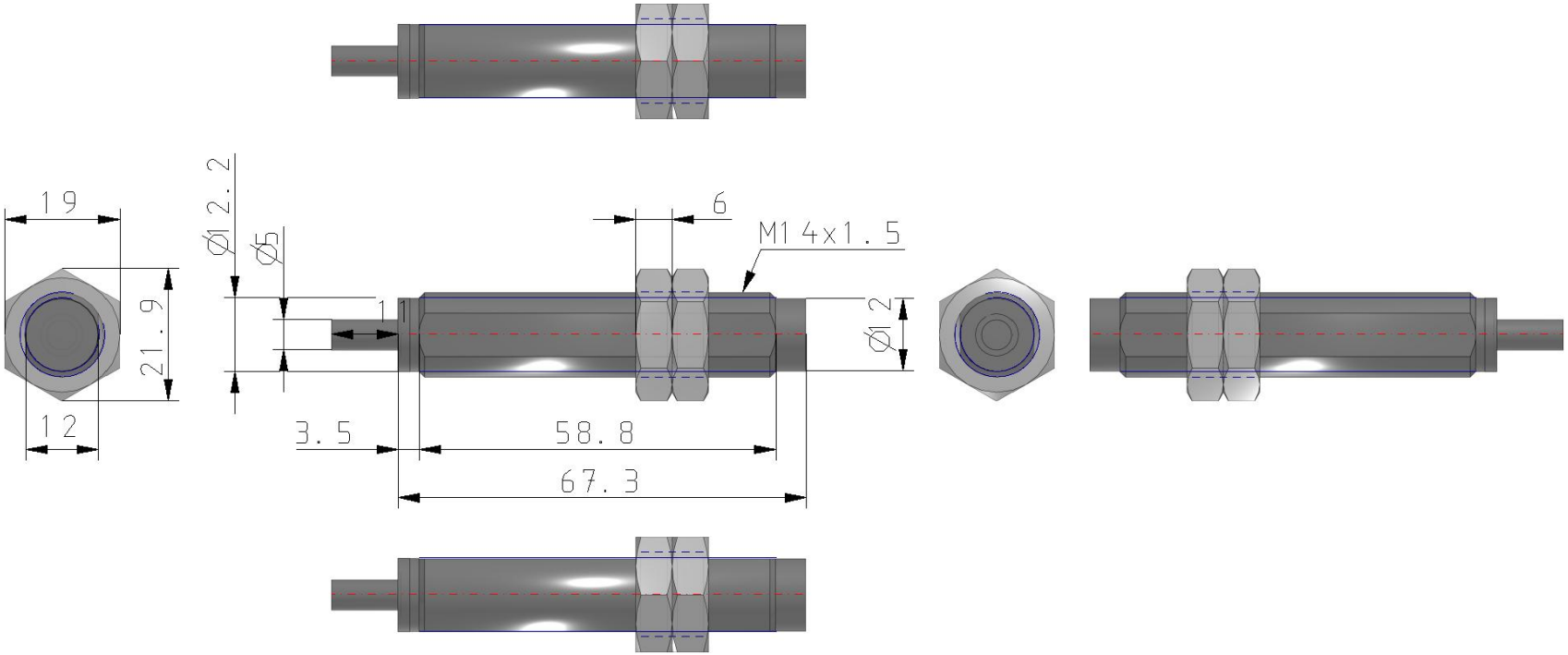

Specifications are subject to change without prior notice and any obligation on the part of the manufacturer.

SMC United Kingdom +34 945184126 sales@smc.uk

Constructions

Extended

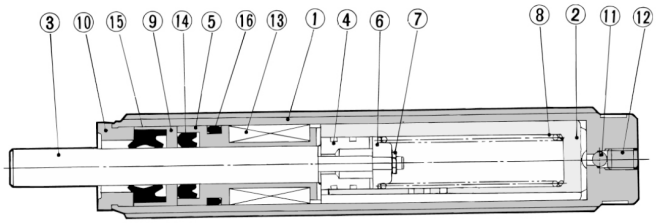

Compressed

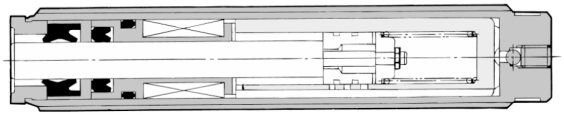

Component Parts

No.	Description	Material	Note
①	Outer tube	Rolled steel	Gray coated
②	Inner tube	Special steel	Heat treatment
③	Piston rod	Special steel	Hard chrome plated
④	Piston	Special steel	Heat treatment
⑤	Bearing	Special bearing material	
⑥	Spring guide	Rolled steel	Zinc chromated
⑦	Pushing nut	Steel for spring	
⑧	Return spring	Piano wire	Zinc chromated
⑨	Seal holder	Copper alloy	
⑩	Stopper	Carbon steel	Zinc chromated
⑪	Steal ball	Bearing steel	
⑫	Set screw	Special steel	
⑬	Accumulator	NBR	Foam rubber
⑭	Rod seal	NBR	
⑮	Scraper	NBR	
⑯	Gasket	NBR	

Specifications are subject to change without prior notice and any obligation on the part of the manufacturer.

SMC United Kingdom +34 945184126 sales@smc.uk

Additional information

Catalogue	RB_EU.pdf
Operation manuals	rb0604e_operation_manual.pdf

Specifications are subject to change without prior notice and any obligation on the part of the manufacturer.

SMC United Kingdom +34 945184126 sales@smc.uk