# MY3M, Mechanical Joint Rodless Cylinder, Slide Bearing Type, w/o Stroke Adjustment Unit

## MY3M63TF-700

Datasheet

## General series information

- w/o Stroke Adjustment Unit
- Work pieces can be loaded directly onto the work table, this is due to the integrated slide bearing guide.
- Also the loading capacity compared to MY3A & MY3B is improved.
- The unique oval shaped piston allows reduction in height and length as well as the practical arrangement of the common piping passages, cushion mechanism and positioning mechanism.
- This has achieved drastic miniaturisation and weight reduction.
- Overall length (Z) reduced by up to 104mm. (Ø63).
- Overall height (H) reduced by up to 28%.Ø63).
- Overall weight reduced by up to 50%. (Ø16)>/li>
- Option for Rc, G or NPT type port threads. (Ø25 to Ø63)

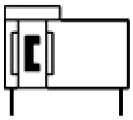

*Rodless cylinder mechanically joint with air cushion*

## Standard specifications

| | |
|---|---|
| Bore Size | ø63mm |
| Thread Type | TF (G) |
| Stroke | 700 |
| Stroke Adjusting Unit | Left: w/o Unit; Right: w/o Unit |
| Auto Switch | Without Auto switch |
| Lead Wire or Pre-wired Connector | 0.5 m (Or None in the Case of No Switch) |
| Number | 2 pcs. (Or None in Case of No Switch) |
| Proof pressure | 1.2 MPa |
| Maximum ambient temperature | 60 ºC |
| Minimum ambient temperature | 5 ºC |
| Conform to the European RoHS Directive | Conform |
| Type of cushioning | Air Cushion |

Specifications are subject to change without prior notice and any obligation on the part of the manufacturer.



SMC CORPORATION Zuazobidea 14, 01012, Vitoria-Gasteiz, Álava +34 945184100 +34 945184126 www.smc.eu support.marketingeurope@smc.com

| | |
|---|---|
| Lubrication | Non-Lube |
| Fluid | Air |
| Stroke length tolerance | +1,8 ~ 0 mm |
| Action | Double Acting |
| Weight | 3.997 Kg |

Specifications are subject to change without prior notice and any obligation on the part of the manufacturer.



SMC CORPORATION Zuazobidea 14, 01012, Vitoria-Gasteiz, Álava +34 945184100 +34 945184126 www.smc.eu support.marketingeurope@smc.com

# Dimensions

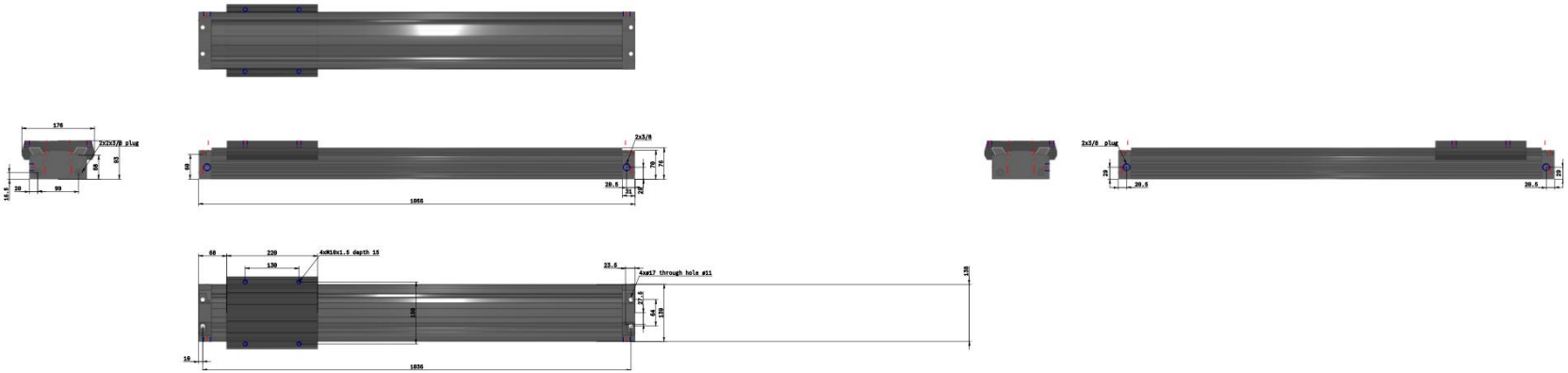


Specifications are subject to change without prior notice and any obligation on the part of the manufacturer.



SMC CORPORATION Zuazobidea 14, 01012, Vitoria-Gasteiz, Álava +34 945184100 +34 945184126 www.smc.eu support.marketingeurope@smc.com

# Constructions

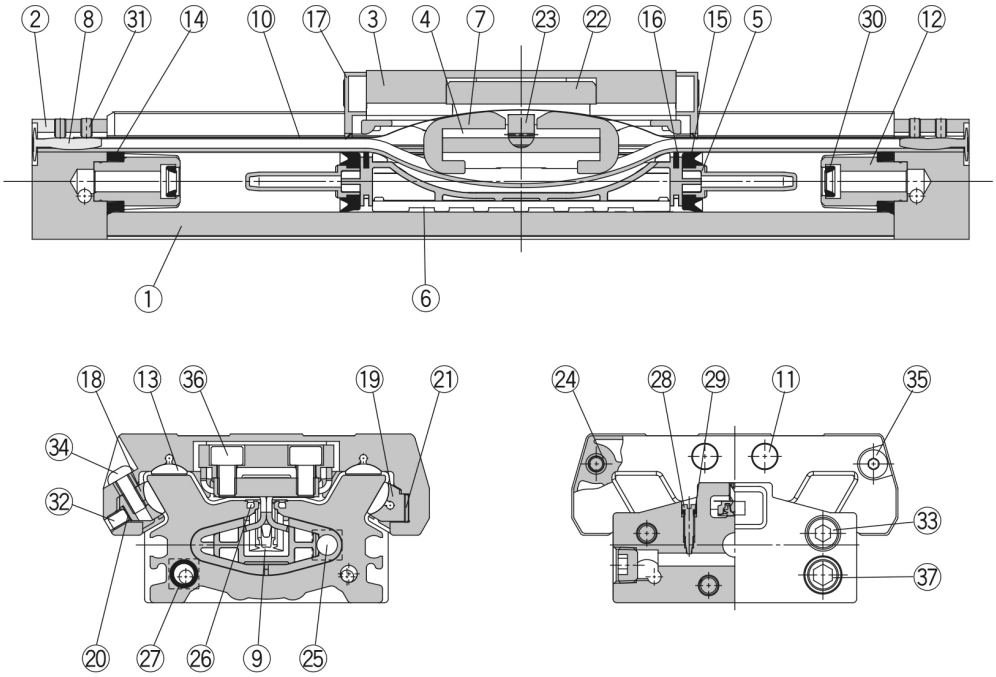


## Component Parts

| No. | Description | Material | Note |
|---|---|---|---|
| 1 | **Cylinder tube** | Aluminum alloy | Hard anodised |
| 2 | **Head cover** | Aluminum alloy | Hard anodised |
| 3 | **Slide table** | Aluminum alloy | Hard anodised |
| 4 | **Piston yoke** | Stainless steel | |
| 5 | **Piston** | Polyamide | |
| 6 | **Wear ring** | Polyacetal | |
| 7 | **Belt separator** | Polyacetal | |
| 8 | **Belt clamp** | Polybutylene terephthalate | |
| 11 | **Stopper** | Carbon steel | Nickel plated |
| 12 | **Cushion boss** | Aluminum alloy | Chromated |
| 13 | **Bearing** | Polyacetal | |
| 16 | **Inner wiper** | Special resin | |
| 17 | **End cover** | Polyamide | |
| 18 | **Adjust arm A** | Aluminum alloy | Chromated |
| 19 | **Adjust arm B** | Aluminum alloy | Chromated |

| No. | Description | Material | Note |
|---|---|---|---|
| 20 | **Backup spring** | Stainless steel | |
| 21 | **Bearing adjustment rubber** | NBR | |
| 22 | **Coupler body** | Aluminum alloy | Hard anodised |
| 23 | **Coupler pin** | Carbon steel | Electroless nickel plated |
| 24 | **Spacer** | Stainless steel | |
| 25 | **Magnet** | — | |
| 26 | **Seal magnet** | Rubber magnet | |
| 28 | **Cushion needle** | Rolled steel | Nickel plated |
| 31 | **Hexagon socket head set screw** | Chrome molybdenum steel | Chromated |
| 32 | **Hexagon socket head set screw** | Chrome molybdenum steel | Chromated |
| 33 | **Hexagon socket head cap screw** | Chrome molybdenum steel | Chromated |
| 34 | **Hexagon socket button head screw** | Chrome molybdenum steel | Chromated |
| 35 | **Hexagon socket button head screw** | Chrome molybdenum steel | Chromated |
| 36 | **Hexagon socket head cap screw** | Chrome molybdenum steel | Chromated |
| 37 | **Hexagon socket head plug** | Carbon steel | Chromated |

## Replacement Parts/Seal

| No. | Description | Material | Qty. | MY3M16 | MY3M25 | MY3M40 | MY3M63 |
|---|---|---|---|---|---|---|---|
| 9 | **Seal belt** | Urethane Polyamide | 1 | MY3B16-16C-Stroke | MY3B25-16C-Stroke | MY3B40-16C-Stroke | MY3B63-16A-Stroke |
| 10 | **Dust seal band** | Stainless steel | 1 | MY3B16-16B-Stroke | MY3B25-16B-Stroke | MY3B40-16B-Stroke | MY3B63-16B-Stroke |
| 29 | **O-ring** | NBR | 2 | KA00309 (ø4 x ø1.8 x ø1.1) | KA00309 (ø4 x ø1.8 x ø1.1) | KA00320 (ø7.15 x ø3.75 x ø1.7) | KA00402 (ø8.3 x ø4.5 x ø1.9) |
| 14 | **Tube gasket** | NBR | 2 | MY3B16-PS | MY3B25-PS | MY3B40-PS | MY3B63-PS |
| 15 | **Piston seal** | NBR | 2 | | | | |
| 27 | **O-ring** | NBR | 4 | | | | |
| 30 | **Cushion seal** | NBR | 2 | | | | |

Specifications are subject to change without prior notice and any obligation on the part of the manufacturer.



SMC CORPORATION Zuazobidea 14, 01012, Vitoria-Gasteiz, Álava +34 945184100 +34 945184126 www.smc.eu support.marketingeurope@smc.com

## Additional information

| | |
|---|---|
| Catalogue | MY3-Cc_EU.pdf |
| Operation manuals | OM_MY3_OM0013QEN.pdf |

Specifications are subject to change without prior notice and any obligation on the part of the manufacturer.



SMC CORPORATION Zuazobidea 14, 01012, Vitoria-Gasteiz, Álava +34 945184100 +34 945184126 www.smc.eu support.marketingeurope@smc.com