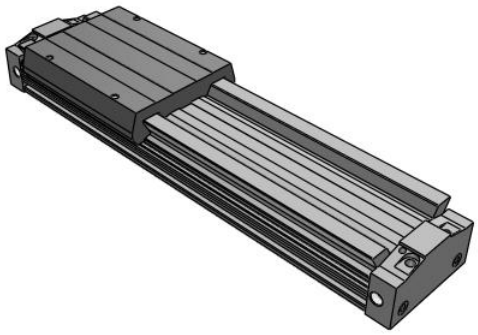

MY3M, Mechanical Joint Rodless Cylinder, Slide Bearing Type, w/o Stroke Adjustment Unit

MY3M63TF-300

Datasheet

General series information

- w/o Stroke Adjustment Unit
- Work pieces can be loaded directly onto the work table, this is due to the integrated slide bearing guide.
- Also the loading capacity compared to MY3A & MY3B is improved.
- The unique oval shaped piston allows reduction in height and length as well as the practical arrangement of the common piping passages, cushion mechanism and positioning mechanism.
- This has achieved drastic miniaturisation and weight reduction.
- Overall length (Z) reduced by up to 104mm. (Ø63).
- Overall height (H) reduced by up to 28%.Ø63).
- Overall weight reduced by up to 50%. (Ø16)>/li>
- Option for Rc, G or NPT type port threads. (Ø25 to Ø63)

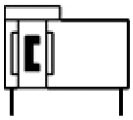

Rodless cylinder mechanically joint with air cushion

Standard specifications

Bore Size	ø63mm
Thread Type	TF (G)
Stroke	300
Stroke Adjusting Unit	Left: w/o Unit; Right: w/o Unit
Auto Switch	Without Auto switch
Lead Wire or Pre-wired Connector	0.5 m (Or None in the Case of No Switch)
Number	2 pcs. (Or None in Case of No Switch)
Proof pressure	1.2 MPa
Maximum ambient temperature	60 ºC
Minimum ambient temperature	5 ºC
Conform to the European RoHS Directive	Conform
Type of cushioning	Air Cushion

Specifications are subject to change without prior notice and any obligation on the part of the manufacturer.

SMC CORPORATION Zuazobidea 14, 01012, Vitoria-Gasteiz, Álava +34 945184100 +34 945184126 www.smc.eu support.marketingeurope@smc.com

Lubrication	Non-Lube
Fluid	Air
Stroke length tolerance	+1,8 ~ 0 mm
Action	Double Acting
Weight	12.710 Kg

Specifications are subject to change without prior notice and any obligation on the part of the manufacturer.

SMC CORPORATION Zuazobidea 14, 01012, Vitoria-Gasteiz, Álava +34 945184100 +34 945184126 www.smc.eu support.marketingeurope@smc.com

Dimensions

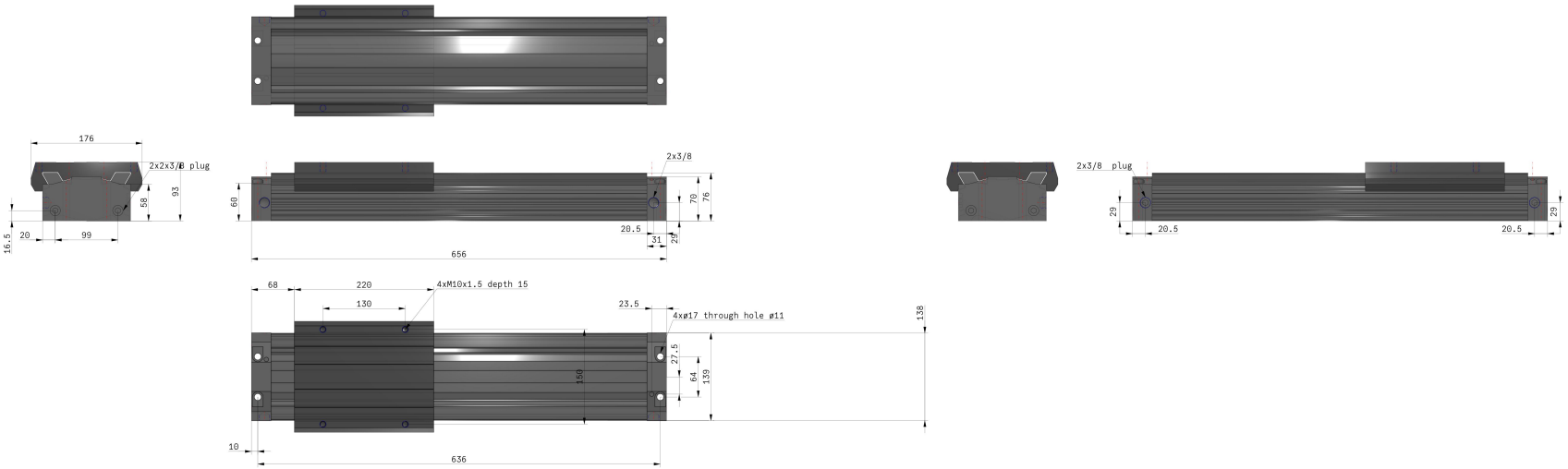

Specifications are subject to change without prior notice and any obligation on the part of the manufacturer.

SMC CORPORATION Zuazobidea 14, 01012, Vitoria-Gasteiz, Álava +34 945184100 +34 945184126 www.smc.eu support.marketingeurope@smc.com

Constructions

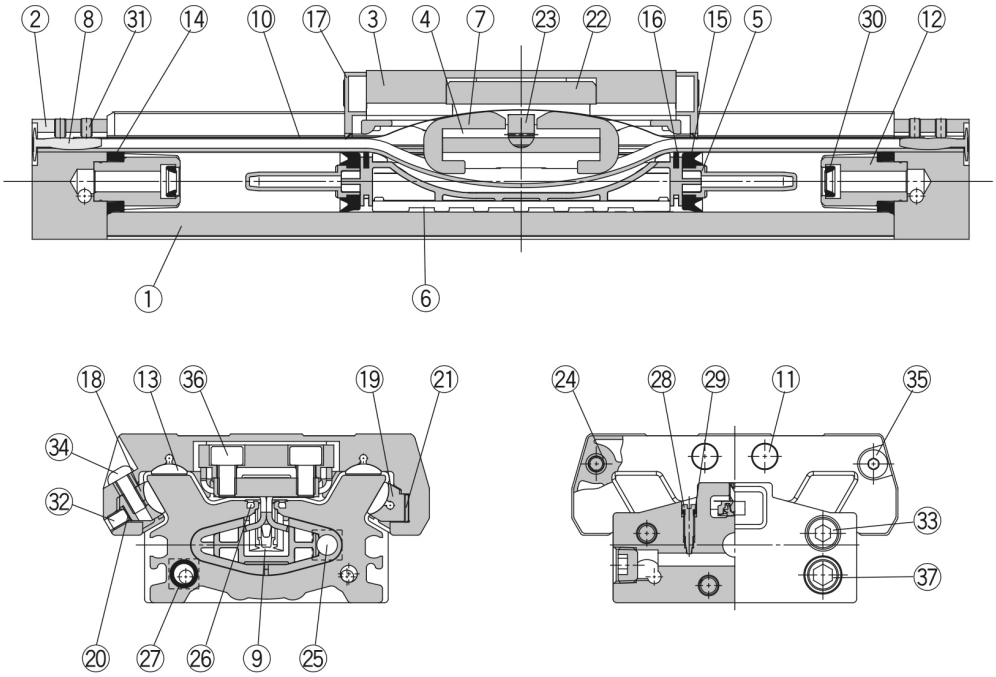

Component Parts

No.	Description	Material	Note
1	**Cylinder tube**	Aluminum alloy	Hard anodised
2	**Head cover**	Aluminum alloy	Hard anodised
3	**Slide table**	Aluminum alloy	Hard anodised
4	**Piston yoke**	Stainless steel	
5	**Piston**	Polyamide	
6	**Wear ring**	Polyacetal	
7	**Belt separator**	Polyacetal	
8	**Belt clamp**	Polybutylene terephthalate	
11	**Stopper**	Carbon steel	Nickel plated
12	**Cushion boss**	Aluminum alloy	Chromated
13	**Bearing**	Polyacetal	
16	**Inner wiper**	Special resin	
17	**End cover**	Polyamide	
18	**Adjust arm A**	Aluminum alloy	Chromated
19	**Adjust arm B**	Aluminum alloy	Chromated

No.	Description	Material	Note
20	**Backup spring**	Stainless steel	
21	**Bearing adjustment rubber**	NBR	
22	**Coupler body**	Aluminum alloy	Hard anodised
23	**Coupler pin**	Carbon steel	Electroless nickel plated
24	**Spacer**	Stainless steel	
25	**Magnet**	—	
26	**Seal magnet**	Rubber magnet	
28	**Cushion needle**	Rolled steel	Nickel plated
31	**Hexagon socket head set screw**	Chrome molybdenum steel	Chromated
32	**Hexagon socket head set screw**	Chrome molybdenum steel	Chromated
33	**Hexagon socket head cap screw**	Chrome molybdenum steel	Chromated
34	**Hexagon socket button head screw**	Chrome molybdenum steel	Chromated
35	**Hexagon socket button head screw**	Chrome molybdenum steel	Chromated
36	**Hexagon socket head cap screw**	Chrome molybdenum steel	Chromated
37	**Hexagon socket head plug**	Carbon steel	Chromated

Replacement Parts/Seal

No.	Description	Material	Qty.	MY3M16	MY3M25	MY3M40	MY3M63
9	**Seal belt**	Urethane Polyamide	1	MY3B16-16C-Stroke	MY3B25-16C-Stroke	MY3B40-16C-Stroke	MY3B63-16A-Stroke
10	**Dust seal band**	Stainless steel	1	MY3B16-16B-Stroke	MY3B25-16B-Stroke	MY3B40-16B-Stroke	MY3B63-16B-Stroke
29	**O-ring**	NBR	2	KA00309 (ø4 x ø1.8 x ø1.1)	KA00309 (ø4 x ø1.8 x ø1.1)	KA00320 (ø7.15 x ø3.75 x ø1.7)	KA00402 (ø8.3 x ø4.5 x ø1.9)
14	**Tube gasket**	NBR	2	MY3B16-PS	MY3B25-PS	MY3B40-PS	MY3B63-PS
15	**Piston seal**	NBR	2				
27	**O-ring**	NBR	4				
30	**Cushion seal**	NBR	2				

Specifications are subject to change without prior notice and any obligation on the part of the manufacturer.

SMC CORPORATION Zuazobidea 14, 01012, Vitoria-Gasteiz, Álava +34 945184100 +34 945184126 www.smc.eu support.marketingeurope@smc.com

Additional information

Catalogue	MY3-Cc_EU.pdf
Operation manuals	OM_MY3_OM0013QEN.pdf

Specifications are subject to change without prior notice and any obligation on the part of the manufacturer.

SMC CORPORATION Zuazobidea 14, 01012, Vitoria-Gasteiz, Álava +34 945184100 +34 945184126 www.smc.eu support.marketingeurope@smc.com