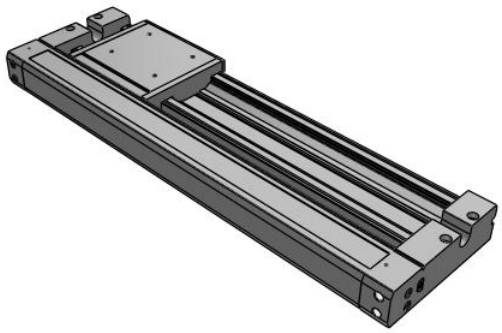

# MY2C, Mechanical Joint Rodless Cylinder, Cam Follower Guide, w/o Stroke Adjustment Unit

## MY2C40TFG-400

Datasheet

## General series information

- w/o Stroke Adjustment Unit
- Mechanically joint rodless cylinder
- Cam follower guide type
- Bore sizes (mm): 16, 25, 40
- Thread types: M, Rc, NPT, G
- Maximum standard stroke: 2000mm
- Auto switch capable

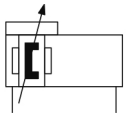

*Rodless cylinder mechanically joint with adjustable cushion*

## Standard specifications

| | |
|---|---|
| Bore Size | 40 mm |
| Port Thread | TF [G Thread (ø25, ø40)] |
| Stroke | 400 |
| Stroke Adjustment Unit | Left: w/o Unit; Right: w/o Unit |
| Auto Switch | No Switch |
| Lead Wire or Prewired Connector | 0.5m (Or None in the Case of No Switch) |
| Number | 2 pcs. (Or None in the Case of No Switch) |
| Made to Order | None |
| Pressure medium | Air;Air |
| Maximum temperature of pressure medium | 60 ºC;60 ºC |
| Minimum temperature of pressure medium | 5 ºC;5 ºC |
| Maximum operating pressure | 0.8 MPa |
| Minimum operating pressure | 0.1 MPa |
| Proof pressure | 1.2 MPa |
| Maximum ambient temperature with magnet | 60 ºC;60 ºC |
| Minimum ambient temperature with magnet | 5 ºC;5 ºC |

*Specifications are subject to change without prior notice and any obligation on the part of the manufacturer.*



**SMC CORPORATION** Zuazobidea 14, 01012, Vitoria-Gasteiz, Álava +34 945184100 +34 945184126 www.smc.eu support.marketingeurope@smc.com

| | |
|---|---|
| Conform to the European RoHS Directive | Conform |
| Number of pneumatic connections | 4 pcs. |
| Pneumatic input connection | G 1/4 |
| Pneumatic exhaust connection | G 1/4 |
| Mode of operation of drive | Double acting |
| Theoretical cylinder force, advance stroke (at 0.5 MPa) | 628 N |
| Maximum piston speed | 1000 mm/s |
| Type of cushioning | Air Cushion |
| Minimum piston speed | 100 mm/s |
| Lubrication | Non-lube |
| Weight | 14.140 Kg |

Specifications are subject to change without prior notice and any obligation on the part of the manufacturer.



SMC CORPORATION Zuazobidea 14, 01012, Vitoria-Gasteiz, Álava +34 945184100 +34 945184126 www.smc.eu support.marketingeurope@smc.com

# Dimensions

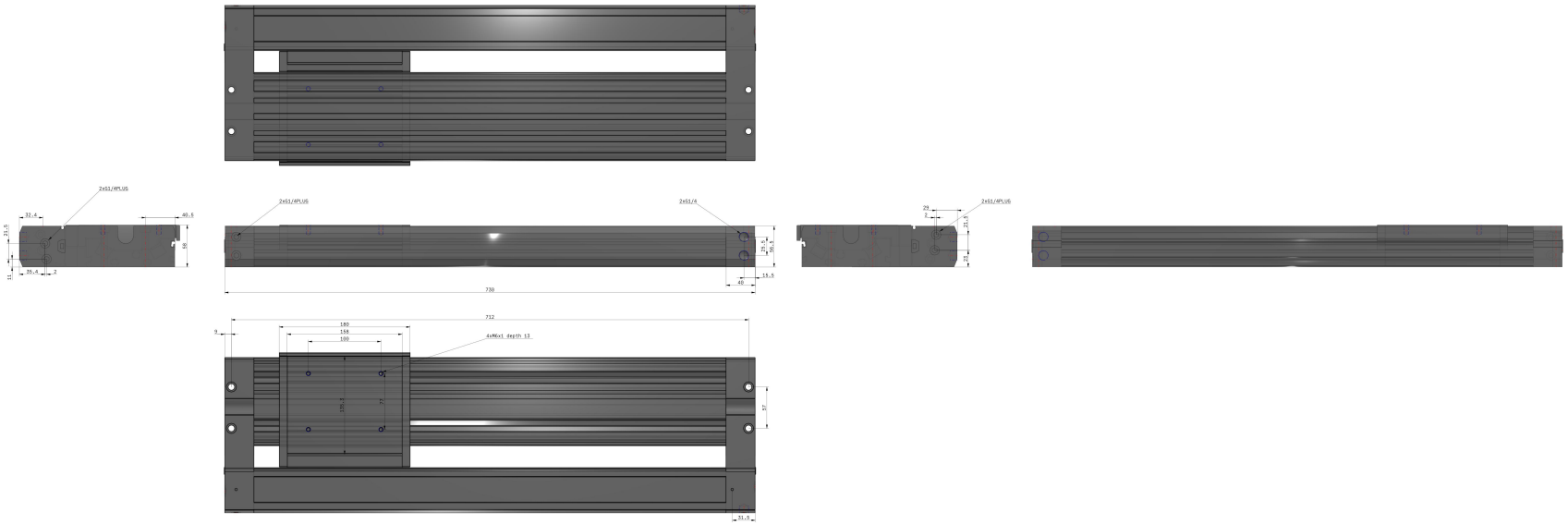


Specifications are subject to change without prior notice and any obligation on the part of the manufacturer.



SMC CORPORATION Zuazobidea 14, 01012, Vitoria-Gasteiz, Álava +34 945184100 +34 945184126 www.smc.eu support.marketingeurope@smc.com

# Constructions

## MY2C

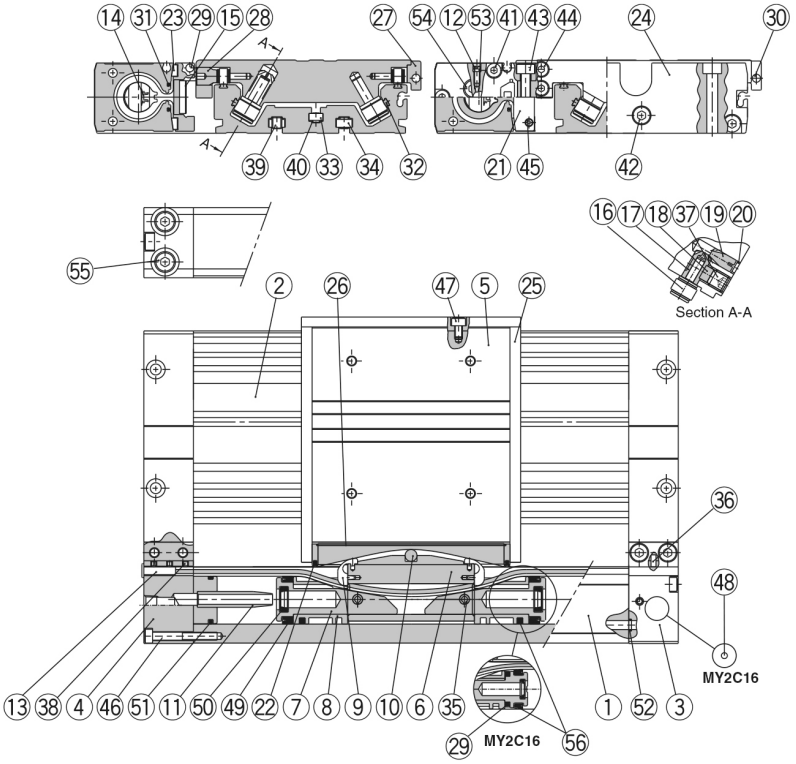


## Component Parts

| No. | Description | Material | Note |
|---|---|---|---|
| 1 | **Cylinder tube** | Aluminium alloy | Hard anodised |
| 2 | **Body** | Aluminium alloy | Hard anodised |
| 3 | **Head cover WR** | Aluminium alloy | Hard anodised |
| 4 | **Head cover WL** | Aluminium alloy | Hard anodised |
| 5 | **Slide table** | Aluminium alloy | Hard anodised |
| 6 | **Piston yoke** | Aluminium alloy | Hard anodised |
| 7 | **Piston** | Aluminium alloy | Chromated |
| 8 | **Wear ring** | Special resin | |
| 9 | **Belt separator** | Special resin | |
| 10 | **Parallel pin** | Stainless steel | |
| 11 | **Cushion ring** | Aluminum alloy | Anodized |
| 12 | **Cushion needle** | Rolled steel | Nickel plated |
| 13 | **Belt clamp** | Special resin | |
| 16 | **Cam follower** | — | |
| 17 | **Eccentric gear** | Stainless steel | |
| 18 | **Gear fixture** | Stainless steel | |
| 19 | **Adjustment gear** | Stainless steel | |
| 20 | **Retaining ring** | Stainless steel | |
| 21 | **End cover** | Aluminium alloy | Hard anodised |
| 23 | **Bearing** | Special resin | |
| 24 | **End plate** | Aluminium alloy | Hard anodised |
| 25 | **Stopper** | Carbon steel | Nickel plated after quenching |
| 26 | **Top cover** | Stainless steel | |
| 27 | **Side cover** | Aluminium alloy | Hard anodised |

| No. | Description | Material | Note |
|---|---|---|---|
| 28 | **Cam follower cap** | Aluminium alloy | Hard anodised |
| 29 | **Magnet** | — | |
| 30 | **Magnet** | — | |
| 31 | **Seal magnet** | Rubber magnet | |
| 32 | **Rail** | Hard steel wire material | |
| 33 | **Square nut** | Carbon steel | Chromated |
| 34 | **Square nut** | Carbon steel | Chromated |
| 35 | **Spring pin** | Carbon tool steel | |
| 36 | **Parallel pin** | Stainless steel | |
| 37 | **Hexagon socket set screw** | Chrome molybdenum steel | Black zinc chromated |
| 38 | **Hexagon socket set screw** | Chrome molybdenum steel | Black zinc chromated |
| 39 | **Hexagon socket set screw** | Chrome molybdenum steel | Chromated |
| 40 | **Hexagon socket set screw** | Chrome molybdenum steel | Chromated |
| 41 | **Hexagon socket head cap screw** | Chrome molybdenum steel | Chromated |
| 42 | **Hexagon socket head cap screw** | Chrome molybdenum steel | Chromated |
| 43 | **Hexagon socket head cap screw** | Chrome molybdenum steel | Chromated |
| 44 | **Hexagon socket head cap screw** | Chrome molybdenum steel | Chromated |
| 45 | **Hexagon socket head cap screw** | Chrome molybdenum steel | Chromated |
| 46 | **Hexagon socket head cap screw** | Chrome molybdenum steel | Chromated |
| 47 | **Hexagon socket head cap screw** | Chrome molybdenum steel | Chromated |
| 48 | **Steel ball** | Spring steel | Nickel plated |
| 54 | **Hexagon socket head (taper) plug** | Carbon steel | Chromated |
| 55 | **Hexagon socket head (taper) plug** | Carbon steel | Chromated |
| 56 | **Lube retainer** | Special resin | |

*Specifications are subject to change without prior notice and any obligation on the part of the manufacturer.*



**SMC CORPORATION** Zuazobidea 14, 01012, Vitoria-Gasteiz, Álava +34 945184100 +34 945184126 www.smc.eu support.marketingeurope@smc.com

## Additional information

| | |
|---|---|
| Catalogue | MY2-Bb_EU.pdf |
| Operation manuals | OM_MY2_OM0011QEN.pdf |

Specifications are subject to change without prior notice and any obligation on the part of the manufacturer.



SMC CORPORATION Zuazobidea 14, 01012, Vitoria-Gasteiz, Álava +34 945184100 +34 945184126 www.smc.eu support.marketingeurope@smc.com