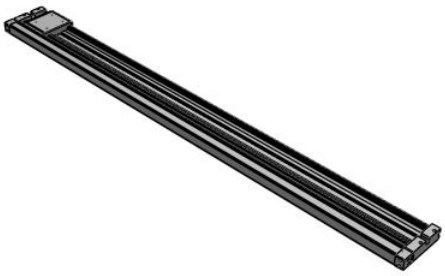

MY2C, Mechanical Joint Rodless Cylinder, Cam Follower Guide, w/o Stroke Adjustment Unit

MY2C25TFG-1400

Datasheet

General series information

- w/o Stroke Adjustment Unit
- Mechanically joint rodless cylinder
- Cam follower guide type
- Bore sizes (mm): 16, 25, 40
- Thread types: M, Rc, NPT, G
- Maximum standard stroke: 2000mm
- Auto switch capable

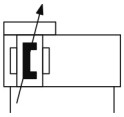

Rodless cylinder mechanically joint with adjustable cushion

Standard specifications

Bore Size	25 mm
Port Thread	TF [G Thread (ø25, ø40)]
Stroke	1400
Stroke Adjustment Unit	Left: w/o Unit; Right: w/o Unit
Auto Switch	No Switch
Lead Wire or Prewired Connector	0.5m (Or None in the Case of No Switch)
Number	2 pcs. (Or None in the Case of No Switch)
Made to Order	None
Pressure medium	Air;Air
Maximum temperature of pressure medium	60 ºC;60 ºC
Minimum temperature of pressure medium	5 ºC;5 ºC
Maximum operating pressure	0.8 MPa
Minimum operating pressure	0.1 MPa
Proof pressure	1.2 MPa
Maximum ambient temperature with magnet	60 ºC;60 ºC
Minimum ambient temperature with magnet	5 ºC;5 ºC

Specifications are subject to change without prior notice and any obligation on the part of the manufacturer.

SMC CORPORATION Zuazobidea 14, 01012, Vitoria-Gasteiz, Álava +34 945184100 +34 945184126 www.smc.eu support.marketingeurope@smc.com

Conform to the European RoHS Directive	Conform
Number of pneumatic connections	4 pcs.
Pneumatic input connection	G 1/8
Pneumatic exhaust connection	G 1/8
Mode of operation of drive	Double acting
Theoretical cylinder force, advance stroke (at 0.5 MPa)	245 N
Maximum piston speed	1000 mm/s
Type of cushioning	Air Cushion
Minimum piston speed	100 mm/s
Lubrication	Non-lube
Weight	10.710 Kg

Specifications are subject to change without prior notice and any obligation on the part of the manufacturer.

SMC CORPORATION Zuazobidea 14, 01012, Vitoria-Gasteiz, Álava +34 945184100 +34 945184126 www.smc.eu support.marketingeurope@smc.com

Dimensions

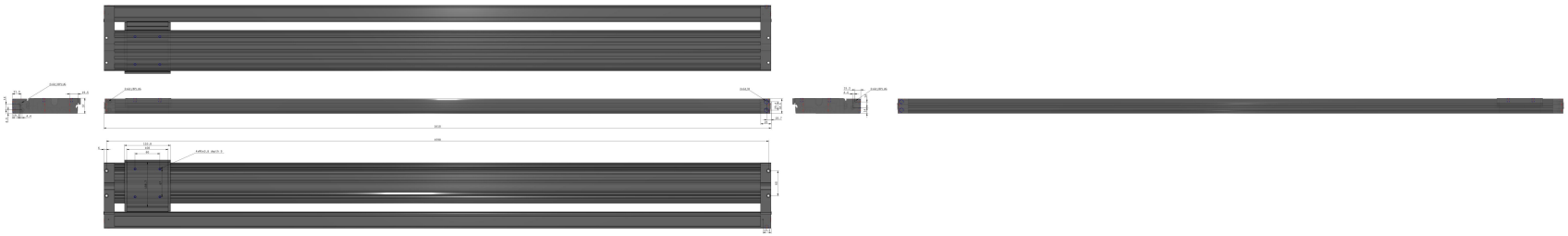

Specifications are subject to change without prior notice and any obligation on the part of the manufacturer.

SMC CORPORATION Zuazobidea 14, 01012, Vitoria-Gasteiz, Álava +34 945184100 +34 945184126 www.smc.eu support.marketingeurope@smc.com

Constructions

MY2C

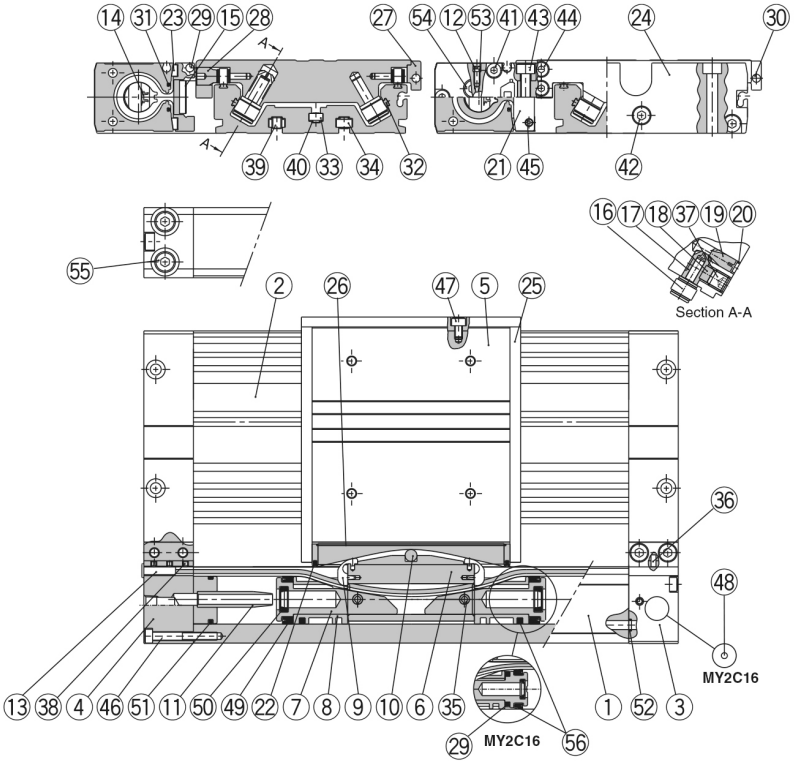

Component Parts

No.	Description	Material	Note
1	**Cylinder tube**	Aluminium alloy	Hard anodised
2	**Body**	Aluminium alloy	Hard anodised
3	**Head cover WR**	Aluminium alloy	Hard anodised
4	**Head cover WL**	Aluminium alloy	Hard anodised
5	**Slide table**	Aluminium alloy	Hard anodised
6	**Piston yoke**	Aluminium alloy	Hard anodised
7	**Piston**	Aluminium alloy	Chromated
8	**Wear ring**	Special resin	
9	**Belt separator**	Special resin	
10	**Parallel pin**	Stainless steel	
11	**Cushion ring**	Aluminum alloy	Anodized
12	**Cushion needle**	Rolled steel	Nickel plated
13	**Belt clamp**	Special resin	
16	**Cam follower**	—	
17	**Eccentric gear**	Stainless steel	
18	**Gear fixture**	Stainless steel	
19	**Adjustment gear**	Stainless steel	
20	**Retaining ring**	Stainless steel	
21	**End cover**	Aluminium alloy	Hard anodised
23	**Bearing**	Special resin	
24	**End plate**	Aluminium alloy	Hard anodised
25	**Stopper**	Carbon steel	Nickel plated after quenching
26	**Top cover**	Stainless steel	
27	**Side cover**	Aluminium alloy	Hard anodised

No.	Description	Material	Note
28	**Cam follower cap**	Aluminium alloy	Hard anodised
29	**Magnet**	—	
30	**Magnet**	—	
31	**Seal magnet**	Rubber magnet	
32	**Rail**	Hard steel wire material	
33	**Square nut**	Carbon steel	Chromated
34	**Square nut**	Carbon steel	Chromated
35	**Spring pin**	Carbon tool steel	
36	**Parallel pin**	Stainless steel	
37	**Hexagon socket set screw**	Chrome molybdenum steel	Black zinc chromated
38	**Hexagon socket set screw**	Chrome molybdenum steel	Black zinc chromated
39	**Hexagon socket set screw**	Chrome molybdenum steel	Chromated
40	**Hexagon socket set screw**	Chrome molybdenum steel	Chromated
41	**Hexagon socket head cap screw**	Chrome molybdenum steel	Chromated
42	**Hexagon socket head cap screw**	Chrome molybdenum steel	Chromated
43	**Hexagon socket head cap screw**	Chrome molybdenum steel	Chromated
44	**Hexagon socket head cap screw**	Chrome molybdenum steel	Chromated
45	**Hexagon socket head cap screw**	Chrome molybdenum steel	Chromated
46	**Hexagon socket head cap screw**	Chrome molybdenum steel	Chromated
47	**Hexagon socket head cap screw**	Chrome molybdenum steel	Chromated
48	**Steel ball**	Spring steel	Nickel plated
54	**Hexagon socket head (taper) plug**	Carbon steel	Chromated
55	**Hexagon socket head (taper) plug**	Carbon steel	Chromated
56	**Lube retainer**	Special resin	

Specifications are subject to change without prior notice and any obligation on the part of the manufacturer.

SMC CORPORATION Zuazobidea 14, 01012, Vitoria-Gasteiz, Álava +34 945184100 +34 945184126 www.smc.eu support.marketingeurope@smc.com

Additional information

Catalogue	MY2-Bb_EU.pdf
Operation manuals	OM_MY2_OM0011QEN.pdf

Specifications are subject to change without prior notice and any obligation on the part of the manufacturer.

SMC CORPORATION Zuazobidea 14, 01012, Vitoria-Gasteiz, Álava +34 945184100 +34 945184126 www.smc.eu support.marketingeurope@smc.com