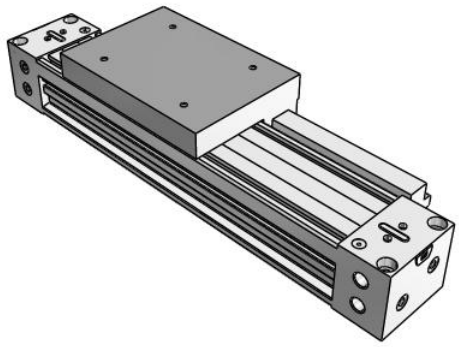

# MY1H-Z, Mechanically Jointed Rodless Cylinder, Linear Guide Type, w/o Stroke Adjustment Unit

MY1H40TFG-100Z

Datasheet

## General series information

- w/o Stroke Adjustment Unit
- Easy adjustment of the cushion needle.
- Entrance of external particle is reduced, reliability improved and maintenance costs reduced.
- Piping flexibility because it can be connected in 4 directions and it can be selected from 2 types (standard and centralised).
- Flexibility in the auto switch mounting.

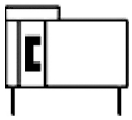

*Mechanically Jointed Rodles Cylinder*

## Standard specifications

| | |
|---|---|
| Bore | 40mm |
| Thread | TF (G) |
| Piping | G (Centralized Piping Type) |
| Stroke | 100 |
| Stroke Adjustment Unit | Left: w/o Unit; Right: w/o Unit |
| End Lock Position | w/o End Lock |
| Auto Switch | No Switch |
| Lead Wire or Prewired Connector | 0.5m (Or None in the Case of No Switch) |
| Number | 2 pcs. (Or None in the Case of No Switch) |
| Made to Order | None |
| Pressure medium | Compressed air |
| Maximum temperature of pressure medium | 60 °C |
| Maximum temperature of pressure medium with magnet | 60 ºC |
| Minimum temperature of pressure medium | 5 °C |
| Minimum temperature of pressure medium with magnet | 5 ºC |
| Maximum operating pressure | 0.8 MPa |
| Minimum operating pressure | 0.1 MPa |

*Specifications are subject to change without prior notice and any obligation on the part of the manufacturer.*



**SMC CORPORATION** Zuazobidea 14, 01012, Vitoria-Gasteiz, Álava +34 945184100 +34 945184126 www.smc.eu support.marketingeurope@smc.com

| | |
|---|---|
| Proof pressure | 1.2 MPa |
| Maximum ambient temperature | 60 °C |
| Maximum ambient temperature with magnet | 60 ºC |
| Minimum ambient temperature | 5 °C |
| Minimum ambient temperature with magnet | 5 ºC |
| Pneumatic input connection | G 1/4 |
| Mode of operation of drive single | Double Acting |
| Theoretical cylinder force, advance stroke (at 0.5 MPa) | 628 N |
| Maximum piston speed | 1000 mm/s |
| Type of cushioning | Air Cushion |
| Number of pneumatic connections | 2 pcs. |
| Usable tubing material | PU |
| Weight | 6.940 Kg |

*Specifications are subject to change without prior notice and any obligation on the part of the manufacturer.*



**SMC CORPORATION** Zuazobidea 14, 01012, Vitoria-Gasteiz, Álava +34 945184100 +34 945184126 www.smc.eu support.marketingeurope@smc.com

# Dimensions

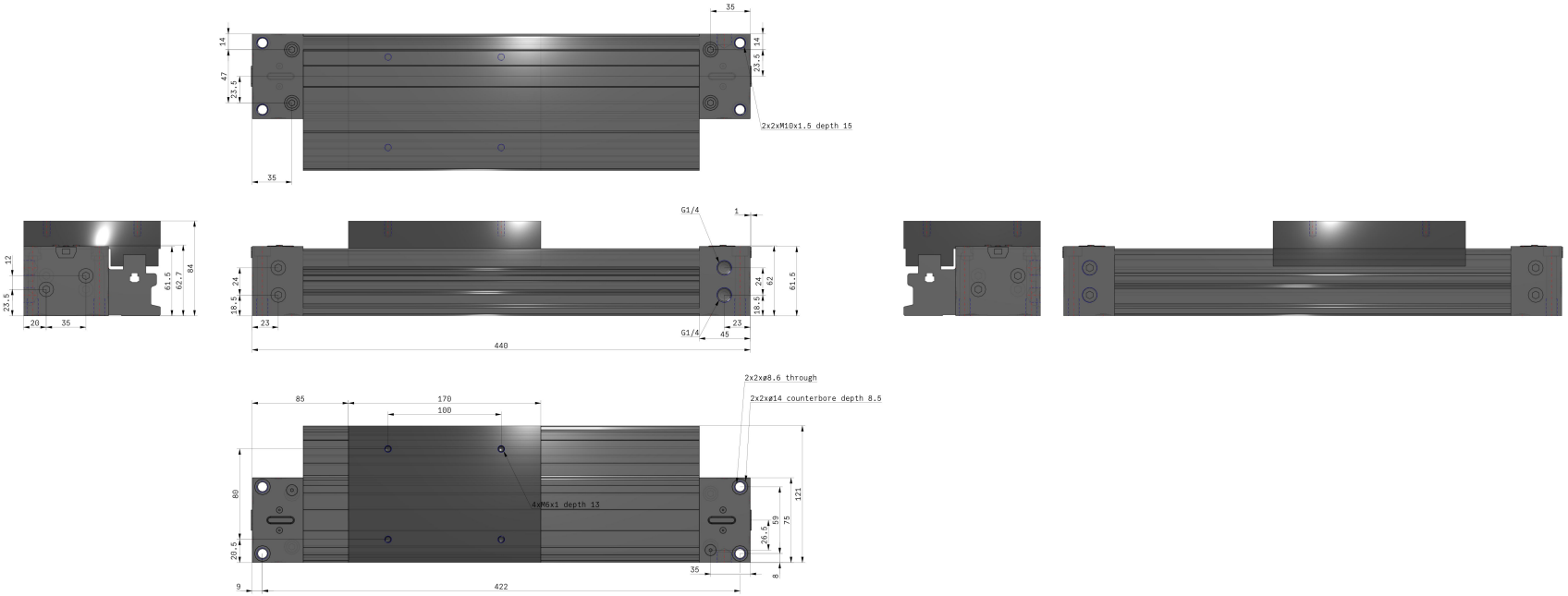


Specifications are subject to change without prior notice and any obligation on the part of the manufacturer.



**SMC CORPORATION** Zuazobidea 14, 01012, Vitoria-Gasteiz, Álava +34 945184100 +34 945184126 www.smc.eu support.marketingeurope@smc.com

# Constructions

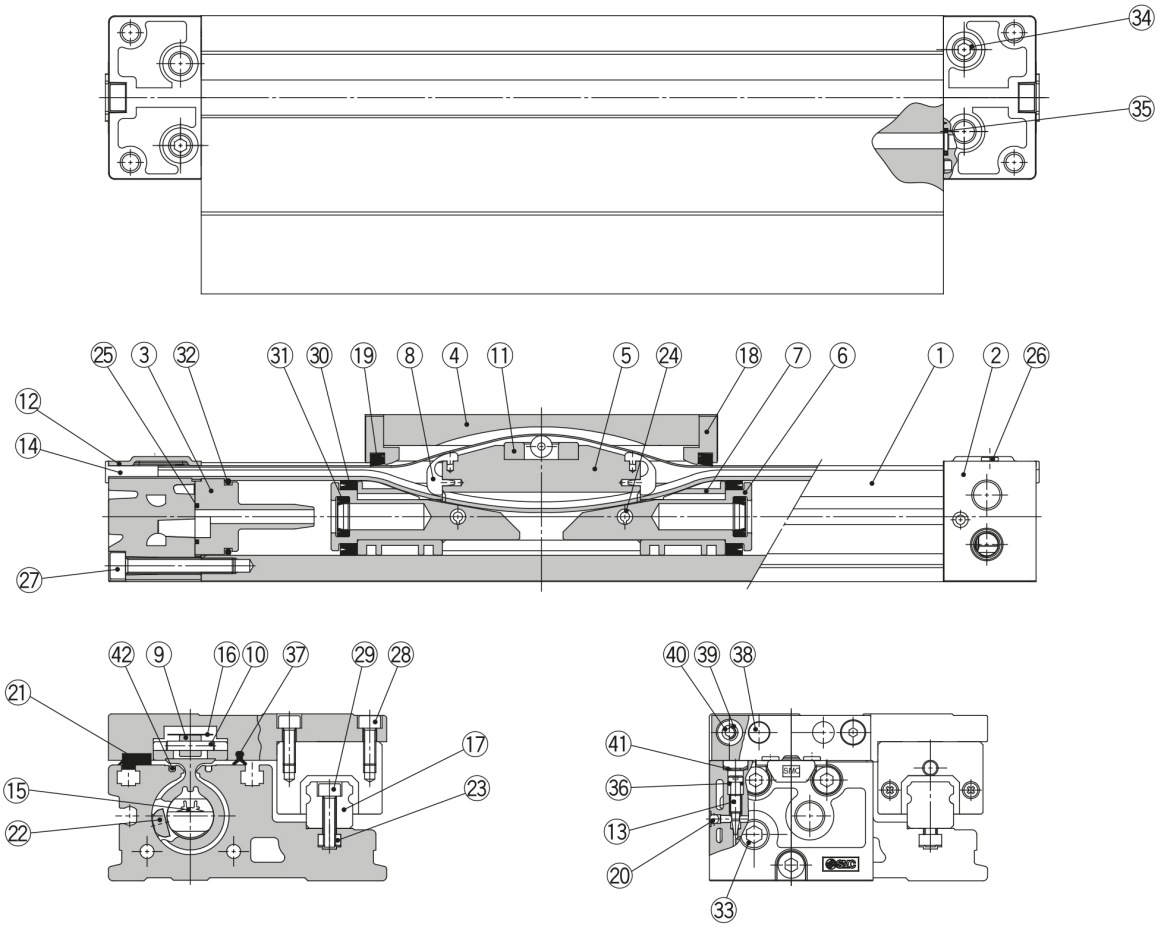


## Component Parts

| No. | Description | Material | Note |
|---|---|---|---|
| 1 | **Cylinder tube** | Aluminium alloy | Hard anodised |
| 2 | **Head cover** | Aluminium alloy | Painted |
| 3 | **Cushion boss** | Special resin | |
| 4 | **Slide table** | Aluminium alloy | Hard anodised |
| 5 | **Piston yoke** | Aluminium alloy | Chromated |
| 6 | **Piston** | Aluminium alloy | Chromated |
| 7 | **Wear ring** | Special resin | |
| 8 | **Belt separator** | Special resin | |
| 9 | **Guide roller** | Special resin | |
| 10 | **Parallel pin** | Stainless steel | |
| 11 | **Coupler** | Sintered iron material | |
| 12 | **Head plate** | Stainless steel | |
| 13 | **Cushion needle** | Rolled steel | Nickel plated |
| 14 | **Belt clamp** | Special resin | |
| 17 | **Guide** | — | |
| 18 | **End cover** | Special resin | |
| 20 | **Steel ball** | Carbon tool steel | |
| 21 | **Bearing** | Special resin | |
| 22 | **Magnet** | Rare earth magnet | |
| 23 | **Square nut** | Carbon steel | Chromated |
| 24 | **Spring pin** | Bearing steel | Black zinc chromated |
| 26 | **Thin head screw** | Chromium molybdenum steel | Chromated |
| 27 | **Hexagon socket head cap screw** | Chromium molybdenum steel | Chromated |
| 28 | **Hexagon socket head cap screw** | Chromium molybdenum steel | Chromated |
| 29 | **Hexagon socket head cap screw** | Chromium molybdenum steel | Chromated |
| 33 | **Hexagon socket head taper plug** | Carbon steel | Chromated (Centralised piping: 10 pcs.) |
| 34 | **Hexagon socket head taper plug** | Carbon steel | Chromated (Centralised piping: 4 pcs.) |
| 38 | **Stopper** | Carbon steel | |
| 39 | **Spacer** | Stainless steel | |
| 40 | **Hexagon socket button head screw** | Chromium molybdenum steel | Chromated |
| 41 | **CR retaining ring** | Spring steel | |
| 42 | **Seal magnet** | Rubber magnet | |

*Specifications are subject to change without prior notice and any obligation on the part of the manufacturer.*



**SMC CORPORATION** Zuazobidea 14, 01012, Vitoria-Gasteiz, Álava +34 945184100 +34 945184126 www.smc.eu support.marketingeurope@smc.com

## Additional information

| | |
|---|---|
| Catalogue | MY1H-A_EU.pdf |
| Operation manuals | OM_MY1_OM0009QEN.pdf |

Specifications are subject to change without prior notice and any obligation on the part of the manufacturer.



SMC CORPORATION Zuazobidea 14, 01012, Vitoria-Gasteiz, Álava +34 945184100 +34 945184126 www.smc.eu support.marketingeurope@smc.com