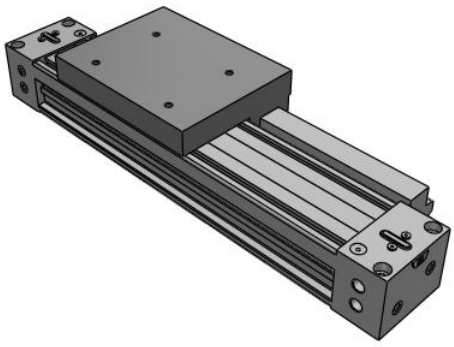

MY1H-Z, Mechanically Jointed Rodless Cylinder, Linear Guide Type, w/o Stroke Adjustment Unit

MY1H32TFG-100Z

Datasheet

General series information

- w/o Stroke Adjustment Unit
- Easy adjustment of the cushion needle.
- Entrance of external particle is reduced, reliability improved and maintenance costs reduced.
- Piping flexibility because it can be connected in 4 directions and it can be selected from 2 types (standard and centralised).
- Flexibility in the auto switch mounting.

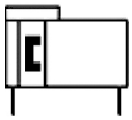

Mechanically Jointed Rodles Cylinder

Standard specifications

Bore Size	32 mm
Thread	TF (G)
Piping	G (Centralized Piping Type)
Stroke	100
Stroke Adjustment Unit	Left: w/o Unit; Right: w/o Unit
End Lock Position	w/o End Lock
Auto Switch	No Switch
Lead Wire or Pre-wired Connector	0.5 m (Or None in the Case of No Switch)
Number	2 pcs. (Or None in Case of No Switch)
Made to Order	None
Pressure medium	Compressed air
Maximum temperature of pressure medium	60 °C
Maximum temperature of pressure medium with magnet	60 ºC
Minimum temperature of pressure medium	5 °C
Minimum temperature of pressure medium with magnet	5 ºC
Maximum operating pressure	0.8 MPa
Minimum operating pressure	0.1 MPa

Specifications are subject to change without prior notice and any obligation on the part of the manufacturer.

SMC CORPORATION Zuazobidea 14, 01012, Vitoria-Gasteiz, Álava +34 945184100 +34 945184126 www.smc.eu support.marketingeurope@smc.com

Proof pressure	1.2 MPa
Maximum ambient temperature	60 °C
Maximum ambient temperature with magnet	60 ºC
Minimum ambient temperature	5 °C
Minimum ambient temperature with magnet	5 ºC
Pneumatic input connection	G 1/8
Mode of operation of drive single	Double Acting
Theoretical cylinder force, advance stroke (at 0.5 MPa)	402 N
Maximum piston speed	1000 mm/s
Type of cushioning	Air Cushion
Number of pneumatic connections	2 pcs.
Usable tubing material	PU
Weight	5.290 Kg

Specifications are subject to change without prior notice and any obligation on the part of the manufacturer.

SMC CORPORATION Zuazobidea 14, 01012, Vitoria-Gasteiz, Álava +34 945184100 +34 945184126 www.smc.eu support.marketingeurope@smc.com

Dimensions

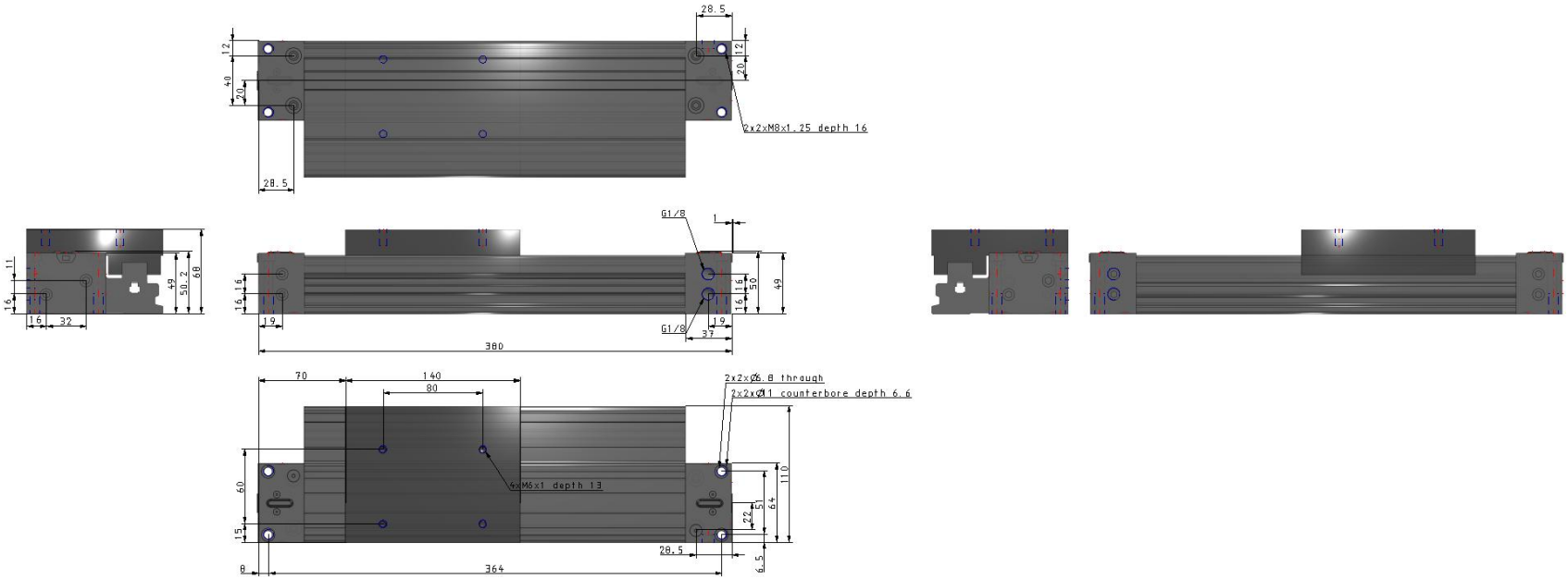

Specifications are subject to change without prior notice and any obligation on the part of the manufacturer.

SMC CORPORATION Zuazobidea 14, 01012, Vitoria-Gasteiz, Álava +34 945184100 +34 945184126 www.smc.eu support.marketingeurope@smc.com

Constructions

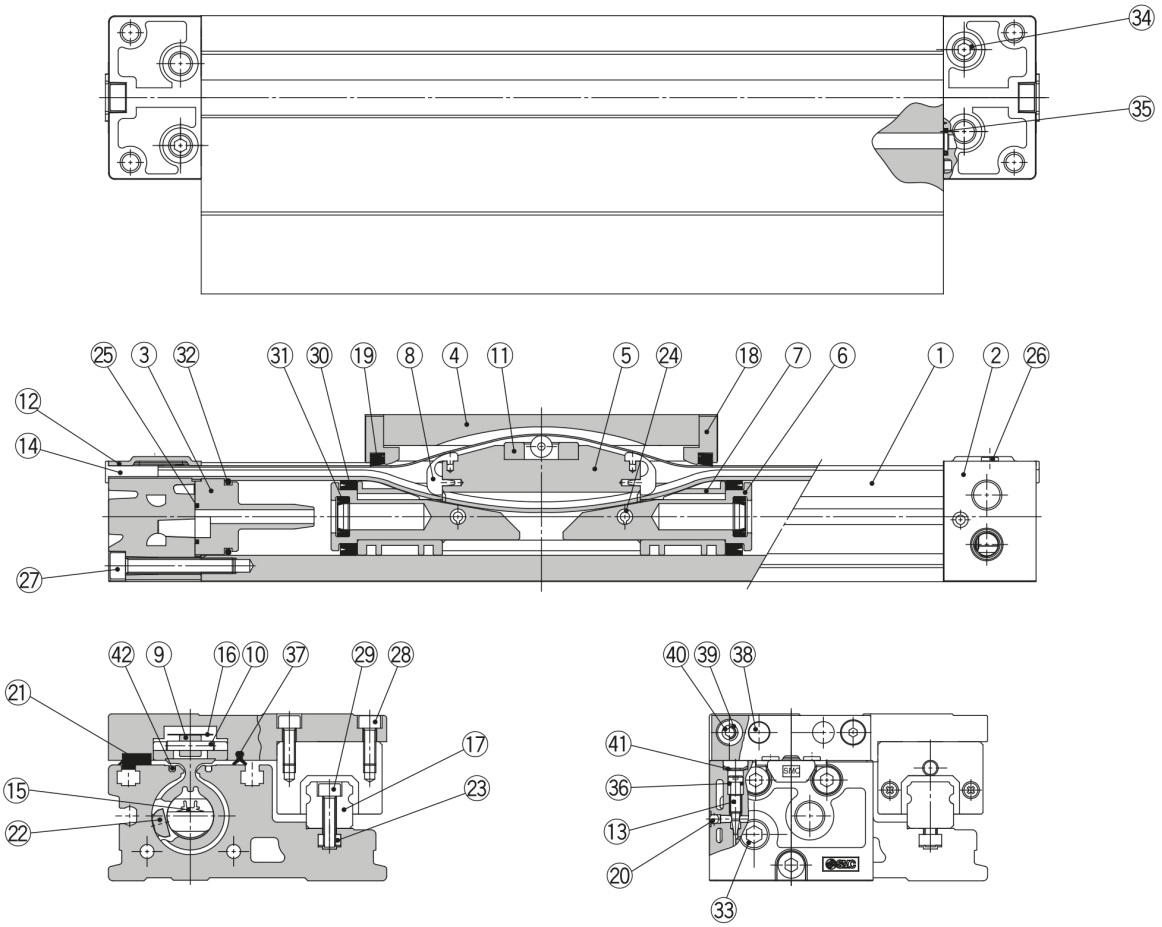

Component Parts

No.	Description	Material	Note
1	**Cylinder tube**	Aluminium alloy	Hard anodised
2	**Head cover**	Aluminium alloy	Painted
3	**Cushion boss**	Special resin	
4	**Slide table**	Aluminium alloy	Hard anodised
5	**Piston yoke**	Aluminium alloy	Chromated
6	**Piston**	Aluminium alloy	Chromated
7	**Wear ring**	Special resin	
8	**Belt separator**	Special resin	
9	**Guide roller**	Special resin	
10	**Parallel pin**	Stainless steel	
11	**Coupler**	Sintered iron material	
12	**Head plate**	Stainless steel	
13	**Cushion needle**	Rolled steel	Nickel plated
14	**Belt clamp**	Special resin	
17	**Guide**	—	
18	**End cover**	Special resin	
20	**Steel ball**	Carbon tool steel	
21	**Bearing**	Special resin	
22	**Magnet**	Rare earth magnet	
23	**Square nut**	Carbon steel	Chromated
24	**Spring pin**	Bearing steel	Black zinc chromated
26	**Thin head screw**	Chromium molybdenum steel	Chromated
27	**Hexagon socket head cap screw**	Chromium molybdenum steel	Chromated
28	**Hexagon socket head cap screw**	Chromium molybdenum steel	Chromated
29	**Hexagon socket head cap screw**	Chromium molybdenum steel	Chromated
33	**Hexagon socket head taper plug**	Carbon steel	Chromated (Centralised piping: 10 pcs.)
34	**Hexagon socket head taper plug**	Carbon steel	Chromated (Centralised piping: 4 pcs.)
38	**Stopper**	Carbon steel	
39	**Spacer**	Stainless steel	
40	**Hexagon socket button head screw**	Chromium molybdenum steel	Chromated
41	**CR retaining ring**	Spring steel	
42	**Seal magnet**	Rubber magnet	

Specifications are subject to change without prior notice and any obligation on the part of the manufacturer.

SMC CORPORATION Zuazobidea 14, 01012, Vitoria-Gasteiz, Álava +34 945184100 +34 945184126 www.smc.eu support.marketingeurope@smc.com

Additional information

Catalogue	MY1H-A_EU.pdf
Operation manuals	OM_MY1_OM0009QEN.pdf

Specifications are subject to change without prior notice and any obligation on the part of the manufacturer.

SMC CORPORATION Zuazobidea 14, 01012, Vitoria-Gasteiz, Álava +34 945184100 +34 945184126 www.smc.eu support.marketingeurope@smc.com