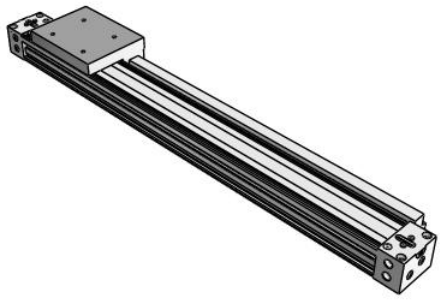

MY1H-Z, Mechanically Jointed Rodless Cylinder, Linear Guide Type, w/o Stroke Adjustment Unit

MY1H25TFG-400Z

Datasheet

General series information

- w/o Stroke Adjustment Unit
- Easy adjustment of the cushion needle.
- Entrance of external particle is reduced, reliability improved and maintenance costs reduced.
- Piping flexibility because it can be connected in 4 directions and it can be selected from 2 types (standard and centralised).
- Flexibility in the auto switch mounting.

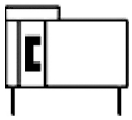

Mechanically Jointed Rodles Cylinder

Standard specifications

Stroke	400
Lead Wire or Prewired Connector	0.5m (Or None in the Case of No Switch)
Piping	G (Centralized Piping Type)
Number	2 pcs. (Or None in the Case of No Switch)
End Lock Position	w/o End Lock
Stroke Adjustment Unit	Left: w/o Unit; Right: w/o Unit
Auto Switch	No Switch
Bore	25mm
Thread	TF (G)
Made to Order	None
Pressure medium	Compressed air
Maximum temperature of pressure medium	60 °C
Maximum temperature of pressure medium with magnet	60 ºC
Minimum temperature of pressure medium	5 °C
Minimum temperature of pressure medium with magnet	5 ºC
Maximum operating pressure	0.8 MPa
Minimum operating pressure	0.1 MPa

Specifications are subject to change without prior notice and any obligation on the part of the manufacturer.

SMC United Kingdom +34 945184126 sales@smc.uk

Proof pressure	1.2 MPa
Maximum ambient temperature	60 °C
Maximum ambient temperature with magnet	60 ºC
Minimum ambient temperature	5 °C
Minimum ambient temperature with magnet	5 ºC
Pneumatic input connection	G 1/8
Mode of operation of drive single	Double Acting
Theoretical cylinder force, advance stroke (at 0.5 MPa)	245 N
Maximum piston speed	1000 mm/s
Type of cushioning	Air Cushion
Number of pneumatic connections	2 pcs.
Usable tubing material	PU
Weight	4.570 Kg

Specifications are subject to change without prior notice and any obligation on the part of the manufacturer.

SMC United Kingdom +34 945184126 sales@smc.uk

Dimensions

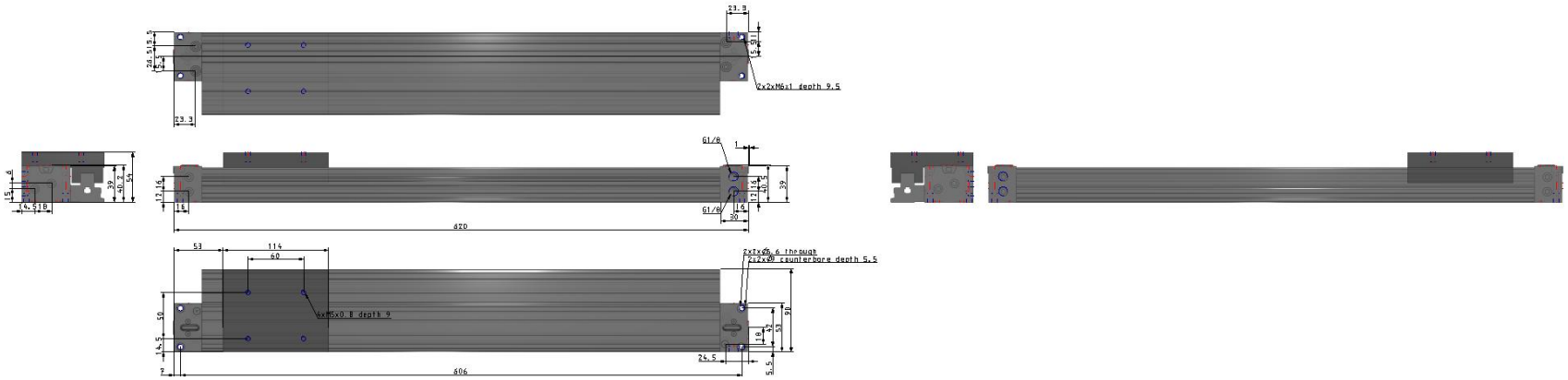

Specifications are subject to change without prior notice and any obligation on the part of the manufacturer.

SMC United Kingdom +34 945184126 sales@smc.uk

Constructions

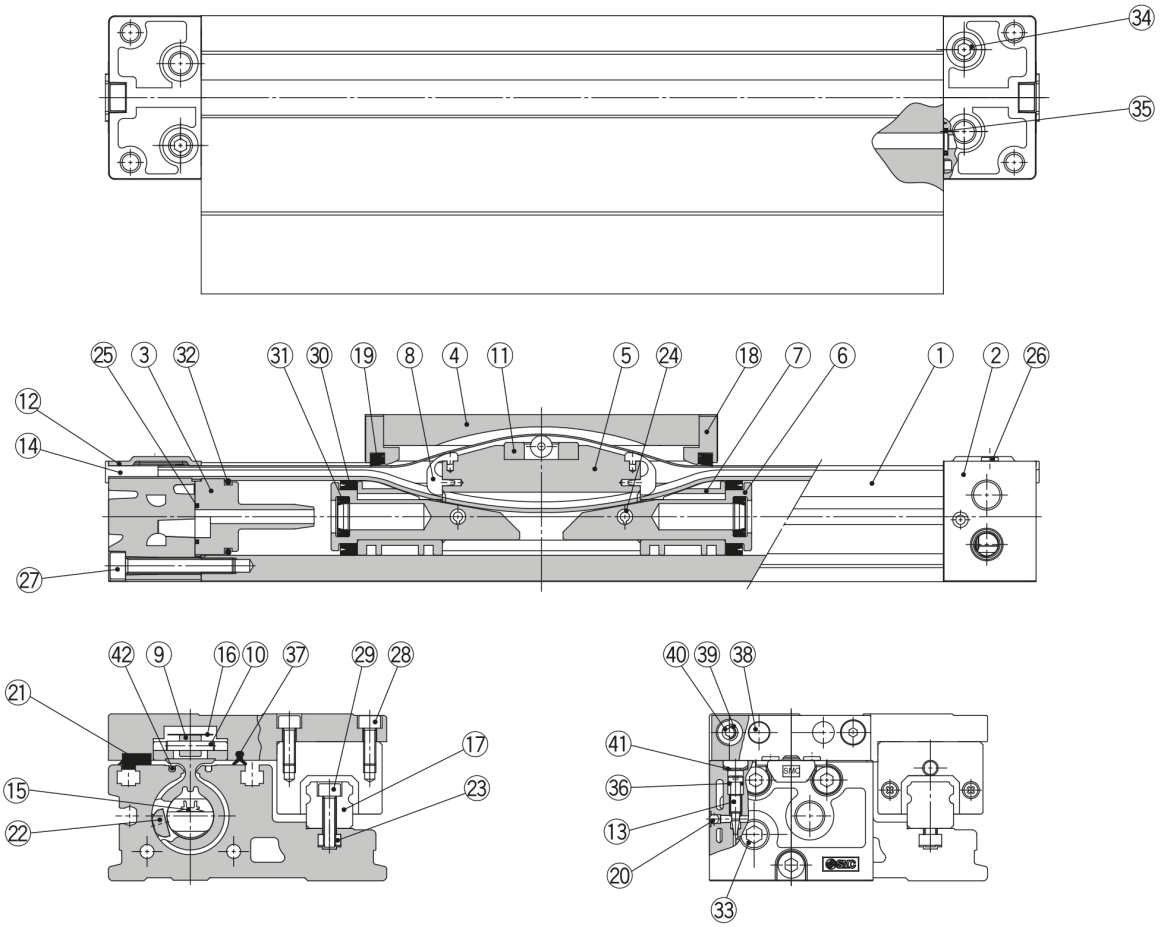

Component Parts

No.	Description	Material	Note
1	**Cylinder tube**	Aluminium alloy	Hard anodised
2	**Head cover**	Aluminium alloy	Painted
3	**Cushion boss**	Special resin	
4	**Slide table**	Aluminium alloy	Hard anodised
5	**Piston yoke**	Aluminium alloy	Chromated
6	**Piston**	Aluminium alloy	Chromated
7	**Wear ring**	Special resin	
8	**Belt separator**	Special resin	
9	**Guide roller**	Special resin	
10	**Parallel pin**	Stainless steel	
11	**Coupler**	Sintered iron material	
12	**Head plate**	Stainless steel	
13	**Cushion needle**	Rolled steel	Nickel plated
14	**Belt clamp**	Special resin	
17	**Guide**	—	
18	**End cover**	Special resin	
20	**Steel ball**	Carbon tool steel	
21	**Bearing**	Special resin	
22	**Magnet**	Rare earth magnet	
23	**Square nut**	Carbon steel	Chromated
24	**Spring pin**	Bearing steel	Black zinc chromated
26	**Thin head screw**	Chromium molybdenum steel	Chromated
27	**Hexagon socket head cap screw**	Chromium molybdenum steel	Chromated
28	**Hexagon socket head cap screw**	Chromium molybdenum steel	Chromated
29	**Hexagon socket head cap screw**	Chromium molybdenum steel	Chromated
33	**Hexagon socket head taper plug**	Carbon steel	Chromated (Centralised piping: 10 pcs.)
34	**Hexagon socket head taper plug**	Carbon steel	Chromated (Centralised piping: 4 pcs.)
38	**Stopper**	Carbon steel	
39	**Spacer**	Stainless steel	
40	**Hexagon socket button head screw**	Chromium molybdenum steel	Chromated
41	**CR retaining ring**	Spring steel	
42	**Seal magnet**	Rubber magnet	

Specifications are subject to change without prior notice and any obligation on the part of the manufacturer.

SMC United Kingdom +34 945184126 sales@smc.uk

Additional information

Catalogue	MY1H-A_EU.pdf
Operation manuals	OM_MY1_OM0009QEN.pdf

Specifications are subject to change without prior notice and any obligation on the part of the manufacturer.

SMC United Kingdom +34 945184126 sales@smc.uk