# MY1B-Z, Mechanical Joint Rodless Cylinder, Basic Type w/o Stroke Adjustment

## MY1B40TF-900Z

Datasheet

## General series information

- w/o Stroke Adjustment Unit
- Easy adjustment of the cushion needle.
- Entrance of external particle is reduced, reliability improved and maintenance costs reduced.
- Piping flexibility because it can be connected in 4 directions and it can be selected from 2 types (standard and centralised).
- Flexibility in the auto switch mounting.

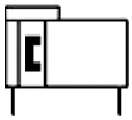

*Mechanically Jointed Rodles Cylinder*

## Standard specifications

| | |
|---|---|
| Bore Size | 40 mm |
| Port Thread | TF (G) |
| Piping | Standard |
| Stroke | 900 |
| Stroke Adjustment Unit | Left: w/o Unit; Right: w/o Unit |
| Auto Switch | No Switch |
| Lead Wire or Pre-wired Connector | 0.5 m (Or None in the Case of No Switch) |
| Number | 2 pcs. (Or None in Case of No Switch) |
| Made to Order | None |
| Pressure medium | Compressed air |
| Maximum temperature of pressure medium | 60 °C |
| Maximum temperature of pressure medium with magnet | 60 ºC |
| Minimum temperature of pressure medium | 5 °C |
| Minimum temperature of pressure medium with magnet | 5 ºC |
| Maximum operating pressure | 0.8 MPa |
| Minimum operating pressure | 0.1 MPa |
| Proof pressure | 1.2 MPa |

*Specifications are subject to change without prior notice and any obligation on the part of the manufacturer.*



**SMC CORPORATION** Zuazobidea 14, 01012, Vitoria-Gasteiz, Álava +34 945184100 +34 945184126 www.smc.eu support.marketingeurope@smc.com

| | |
|---|---|
| Maximum ambient temperature | 60 °C |
| Maximum ambient temperature with magnet | 60 ºC |
| Minimum ambient temperature | 5 °C |
| Minimum ambient temperature with magnet | 5 ºC |
| Pneumatic input connection | G 1/4 |
| Mode of operation of drive single | Double Acting |
| Theoretical cylinder force, advance stroke (at 0.5 MPa) | 628 N |
| Maximum piston speed | 1000 mm/s |
| Type of cushioning | Air Cushion |
| Number of pneumatic connections | 2 pcs. |
| Usable tubing material | PU |
| Weight | 7.610 Kg |

*Specifications are subject to change without prior notice and any obligation on the part of the manufacturer.*



**SMC CORPORATION** Zuazobidea 14, 01012, Vitoria-Gasteiz, Álava +34 945184100 +34 945184126 www.smc.eu support.marketingeurope@smc.com

# Dimensions

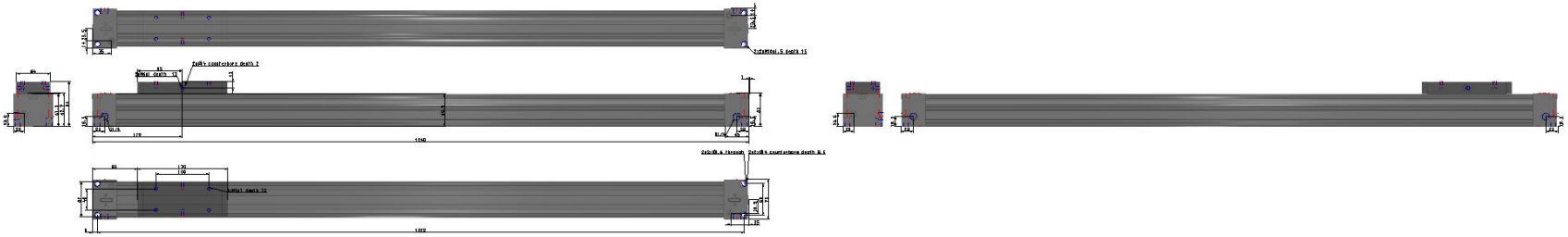

Specifications are subject to change without prior notice and any obligation on the part of the manufacturer.



SMC CORPORATION Zuazobidea 14, 01012, Vitoria-Gasteiz, Álava +34 945184100 +34 945184126 www.smc.eu support.marketingeurope@smc.com

# Constructions

## MY1B25 to 40

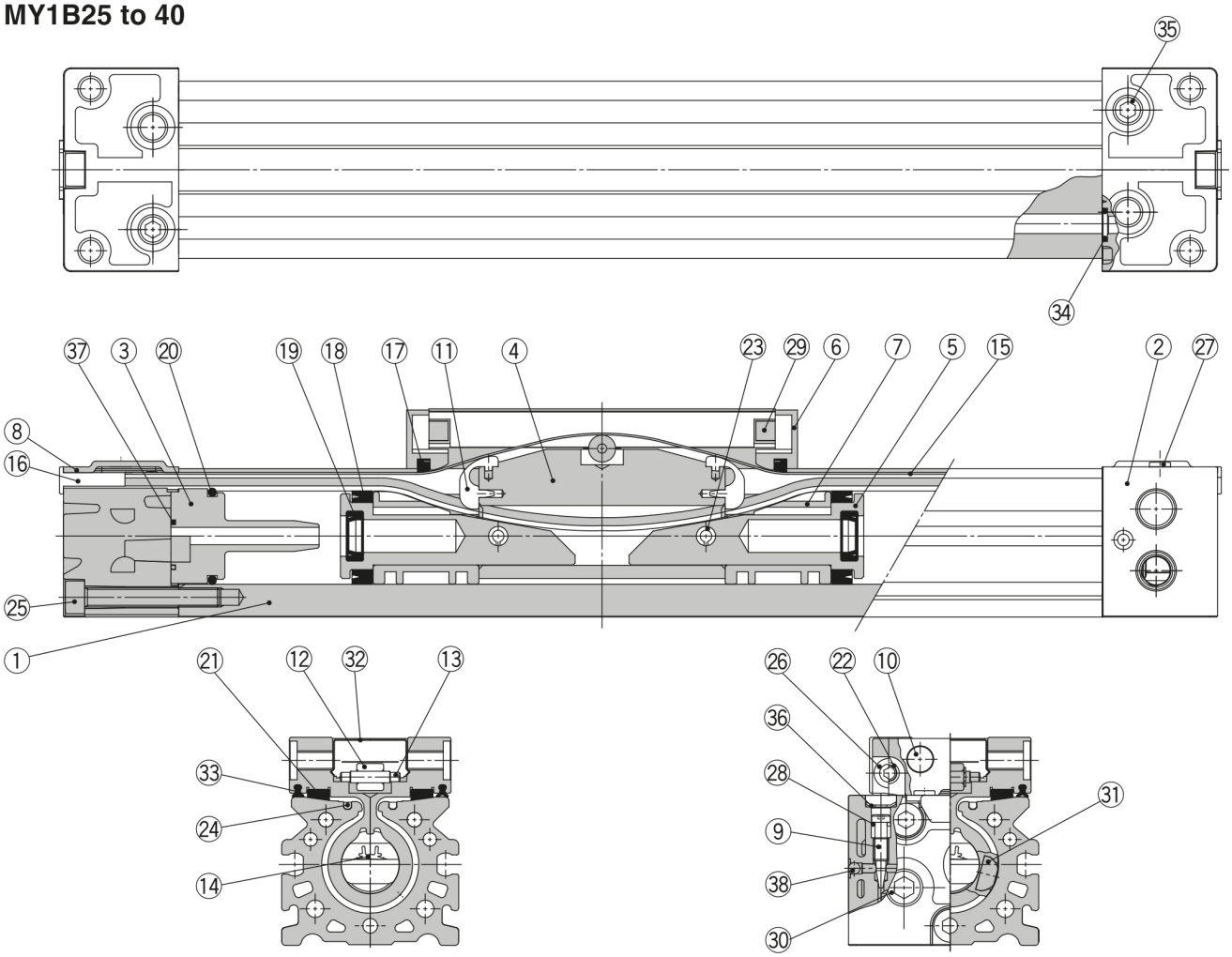


### Component Parts

| No. | Description | Material | Qty. | Note |
|---|---|---|---|---|
| 1 | **Cylinder tube** | Aluminium alloy | 1 | Hard anodised |
| 2 | **Head cover** | Aluminium alloy | 2 | Painted |
| 3 | **Cushion boss** | Polyacetal | 2 | |
| 4 | **Piston yoke** | Aluminium alloy | 1 | Anodised |
| 5 | **Piston** | Aluminium alloy | 2 | Chromated |
| 6 | **End cover** | Polyacetal | 2 | |
| 7 | **Wear ring** | Polyacetal | 2 | |
| 8 | **Head plate** | Stainless steel | 2 | |
| 9 | **Cushion needle** | Rolled steel | 2 | Nickel plated |
| 10 | **Stopper** | Carbon steel | 4 | Nickel plated |
| 11 | **Belt separator** | Polyacetal | 2 | |
| 12 | **Guide roller** | Polyacetal | 1 | |
| 13 | **Parallel pin** | Carbon steel | 1 | |
| 16 | **Belt clamp** | Polybutylene terephthalate | 2 | |
| 21 | **Bearing** | Polyacetal | 2 | |

| No. | Description | Material | Qty. | Note |
|---|---|---|---|---|
| 22 | **Spacer** | Stainless steel | 4 | |
| 23 | **Spring pin** | Carbon tool steel | 2 | |
| 24 | **Seal magnet** | Rubber magnet | 2 | |
| 25 | **Hexagon socket head cap screw** | Chromium molybdenum steel | 6 | Chromated |
| 26 | **Hexagon socket button head screw** | Chromium molybdenum steel | 4 | Chromated |
| 27 | **Thin head screw** | Chromium molybdenum steel | 4 | Chromated |
| 29 | **Double round parallel key** | Carbon steel | 2 | |
| 30 | **Hexagon socket head taper plug** | Carbon steel | 4 | Chromated (Centralised piping: 7pcs.) |
| 31 | **Magnet** | Rare earth magnet | 2 | |
| 32 | **Top cover** | Stainless steel | 1 | |
| 35 | **Hexagon socket head taper plug** | Carbon steel | 2 | Chromated (Centralised piping: 3 pcs.) |
| 36 | **Type CR retaining ring** | Spring steel | 2 | |
| 38 | **Steel ball** | Spring steel | 2 | |

*Specifications are subject to change without prior notice and any obligation on the part of the manufacturer.*



**SMC CORPORATION** Zuazobidea 14, 01012, Vitoria-Gasteiz, Álava +34 945184100 +34 945184126 www.smc.eu support.marketingeurope@smc.com

## Additional information

| | |
|---|---|
| Catalogue | MY1B-Aa_EU.pdf |
| Operation manuals | OM_MY1_OM0009QEN.pdf |

Specifications are subject to change without prior notice and any obligation on the part of the manufacturer.



SMC CORPORATION Zuazobidea 14, 01012, Vitoria-Gasteiz, Álava +34 945184100 +34 945184126 www.smc.eu support.marketingeurope@smc.com