MY1B-Z, Mechanical Joint Rodless Cylinder, Basic Type w/o Stroke Adjustment

MY1B32TFG-1000Z

Datasheet

General series information

- w/o Stroke Adjustment Unit
- Easy adjustment of the cushion needle.
- Entrance of external particle is reduced, reliability improved and maintenance costs reduced.
- Piping flexibility because it can be connected in 4 directions and it can be selected from 2 types (standard and centralised).
- Flexibility in the auto switch mounting.

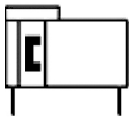

Mechanically Jointed Rodles Cylinder

Standard specifications

Bore Size	32 mm
Stroke	1000
Lead Wire or Prewired Connector	0.5m (Or None in the Case of No Switch)
Piping	G (Centralized Piping Type)
Number	2 pcs. (Or None in the Case of No Switch)
Port Thread	TF (G)
Stroke Adjustment Unit	Left: w/o Unit; Right: w/o Unit
Auto Switch	No Switch
Made to Order	None
Pressure medium	Compressed air
Maximum temperature of pressure medium	60 °C
Maximum temperature of pressure medium with magnet	60 ºC
Minimum temperature of pressure medium	5 °C
Minimum temperature of pressure medium with magnet	5 ºC
Maximum operating pressure	0.8 MPa
Minimum operating pressure	0.1 MPa
Proof pressure	1.2 MPa

Specifications are subject to change without prior notice and any obligation on the part of the manufacturer.

SMC United Kingdom +34 945184126 sales@smc.uk

Maximum ambient temperature	60 °C
Maximum ambient temperature with magnet	60 ºC
Minimum ambient temperature	5 °C
Minimum ambient temperature with magnet	5 ºC
Pneumatic input connection	G 1/8
Mode of operation of drive single	Double Acting
Theoretical cylinder force, advance stroke (at 0.5 MPa)	402 N
Maximum piston speed	1000 mm/s
Type of cushioning	Air Cushion
Number of pneumatic connections	2 pcs.
Usable tubing material	PU
Weight	6.250 Kg

Specifications are subject to change without prior notice and any obligation on the part of the manufacturer.

SMC United Kingdom +34 945184126 sales@smc.uk

Dimensions

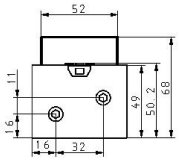

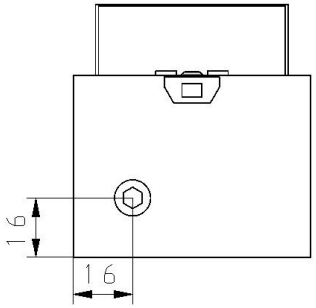

Specifications are subject to change without prior notice and any obligation on the part of the manufacturer.

Constructions

MY1B25 to 40

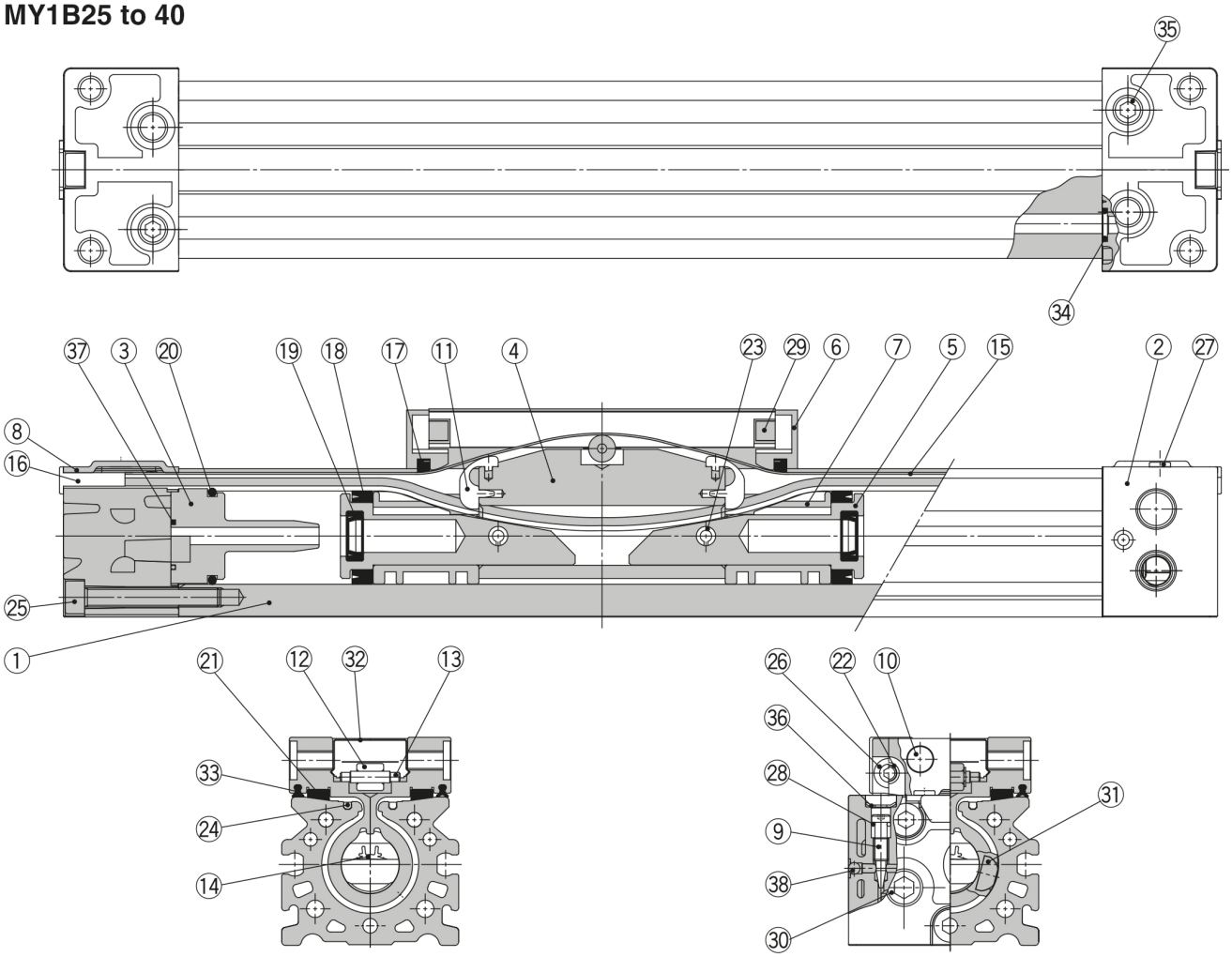

Component Parts

No.	Description	Material	Qty.	Note
1	**Cylinder tube**	Aluminium alloy	1	Hard anodised
2	**Head cover**	Aluminium alloy	2	Painted
3	**Cushion boss**	Polyacetal	2	
4	**Piston yoke**	Aluminium alloy	1	Anodised
5	**Piston**	Aluminium alloy	2	Chromated
6	**End cover**	Polyacetal	2	
7	**Wear ring**	Polyacetal	2	
8	**Head plate**	Stainless steel	2	
9	**Cushion needle**	Rolled steel	2	Nickel plated
10	**Stopper**	Carbon steel	4	Nickel plated
11	**Belt separator**	Polyacetal	2	
12	**Guide roller**	Polyacetal	1	
13	**Parallel pin**	Carbon steel	1	
16	**Belt clamp**	Polybutylene terephthalate	2	
21	**Bearing**	Polyacetal	2	

No.	Description	Material	Qty.	Note
22	**Spacer**	Stainless steel	4	
23	**Spring pin**	Carbon tool steel	2	
24	**Seal magnet**	Rubber magnet	2	
25	**Hexagon socket head cap screw**	Chromium molybdenum steel	6	Chromated
26	**Hexagon socket button head screw**	Chromium molybdenum steel	4	Chromated
27	**Thin head screw**	Chromium molybdenum steel	4	Chromated
29	**Double round parallel key**	Carbon steel	2	
30	**Hexagon socket head taper plug**	Carbon steel	4	Chromated (Centralised piping: 7pcs.)
31	**Magnet**	Rare earth magnet	2	
32	**Top cover**	Stainless steel	1	
35	**Hexagon socket head taper plug**	Carbon steel	2	Chromated (Centralised piping: 3 pcs.)
36	**Type CR retaining ring**	Spring steel	2	
38	**Steel ball**	Spring steel	2	

Specifications are subject to change without prior notice and any obligation on the part of the manufacturer.

SMC United Kingdom +34 945184126 sales@smc.uk

Additional information

Catalogue	MY1B-Aa_EU.pdf
Operation manuals	OM_MY1_OM0009QEN.pdf

Specifications are subject to change without prior notice and any obligation on the part of the manufacturer.

SMC United Kingdom +34 945184126 sales@smc.uk