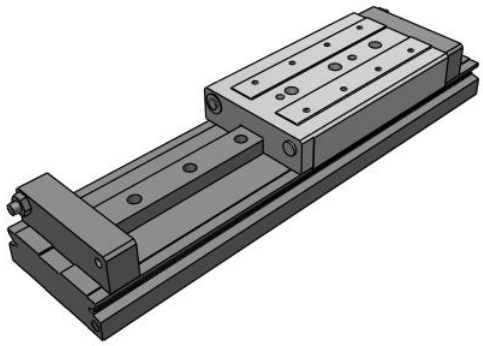

# MXW, Long Stroke Precision Slide Table (Recirculating Bearings) - Mechanically Coupled

## MXW25TF-175

Datasheet

## General series information

The MXW is a long stroke slide table designed for strokes up to 10 inches (300mm). Stroke adjustment is standard with optional shock absorbers. The rigid table makes the MXW ideal for precise transfer of loads.

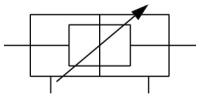

*Double-acting cylinder with cushioning adjustable at both ends, double piston rod*

## Standard specifications

| | |
|---|---|
| Bore Size | 25 mm |
| Thread Type | TF (G) |
| Stroke | 175 mm |
| Option | Standard (w/Urethane Bumper) |
| Auto Switch | No Switch |
| Lead Wire or Pre-wired Connector | 0.5 m (Or None in the Case of No Switch) |
| Number | 2 pcs. (Or None in Case of No Switch) |
| Maximum operating pressure | 0,7 MPa |
| Minimum operating pressure | 0,15 Mpa |
| Proof pressure | 1,05 MPa |
| Maximum ambient temperature | 60 ºC |
| Minimum ambient temperature | -10 ºC |
| Theoretical cylinder force, advance stroke (at 0.5 MPa) | 491 N |
| Theoretical cylinder force, return stroke (at 0.5 MPa) | 378 N |
| Maximum piston speed | 500 mm/s |
| Type of cushioning | "Both ends urethane bumper (standard) Both ends shock absorber (option)" |
| Minimum piston speed | 50 mm/s |
| Port size | 1/8 |
| Lubrication | Non-lube |
| Circulating fluid | Air |

Specifications are subject to change without prior notice and any obligation on the part of the manufacturer.



SMC CORPORATION Zuazobidea 14, 01012, Vitoria-Gasteiz, Álava +34 945184100 +34 945184126 www.smc.eu support.marketingeurope@smc.com

| | |
|---|---|
| Action | Double acting |
| Weight | 9.470 Kg |

Specifications are subject to change without prior notice and any obligation on the part of the manufacturer.



SMC CORPORATION Zuazobidea 14, 01012, Vitoria-Gasteiz, Álava +34 945184100 +34 945184126 www.smc.eu support.marketingeurope@smc.com

# Dimensions

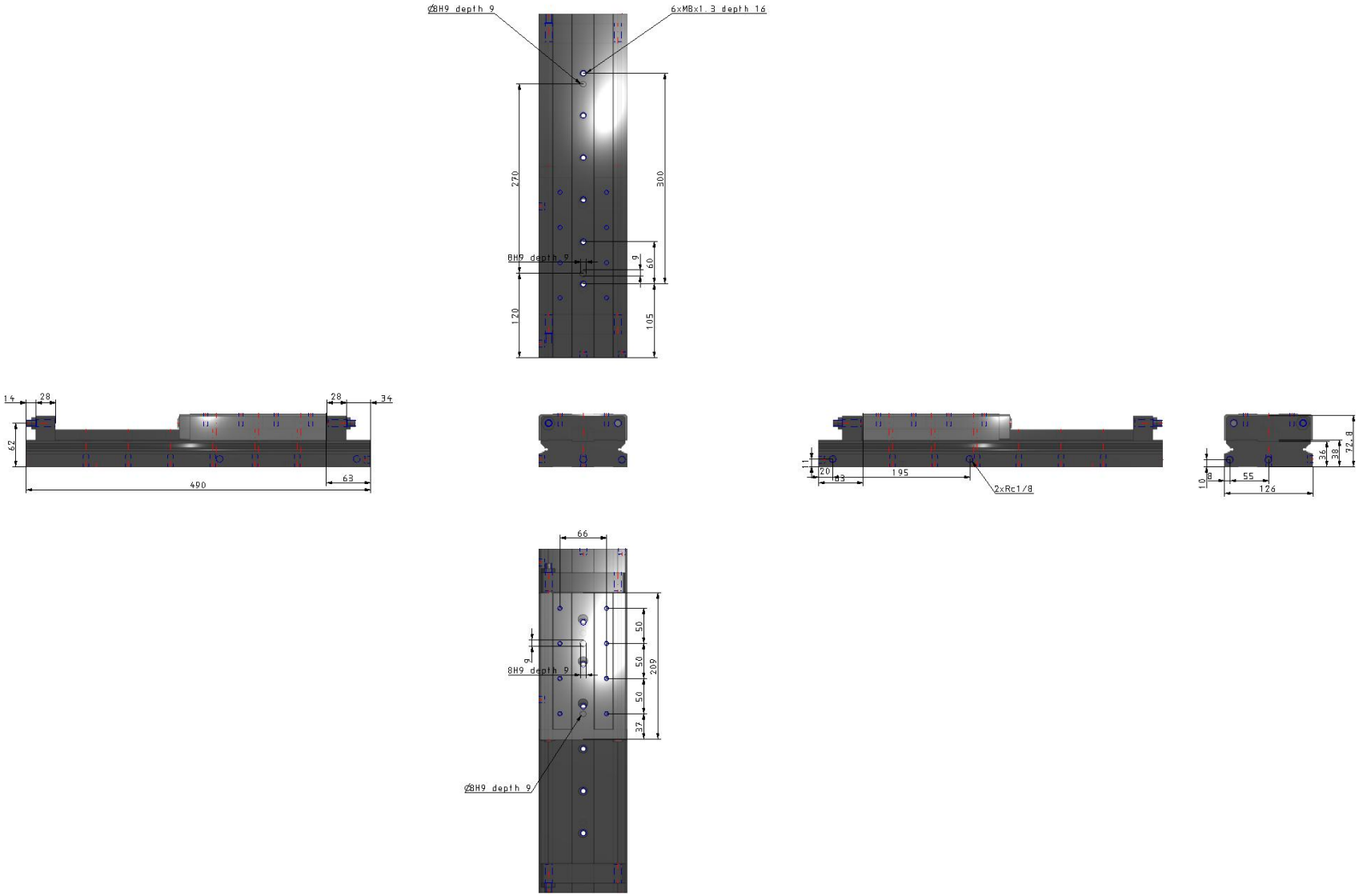


Specifications are subject to change without prior notice and any obligation on the part of the manufacturer.



**SMC CORPORATION** Zuazobidea 14, 01012, Vitoria-Gasteiz, Álava +34 945184100 +34 945184126 www.smc.eu support.marketingeurope@smc.com

# Constructions

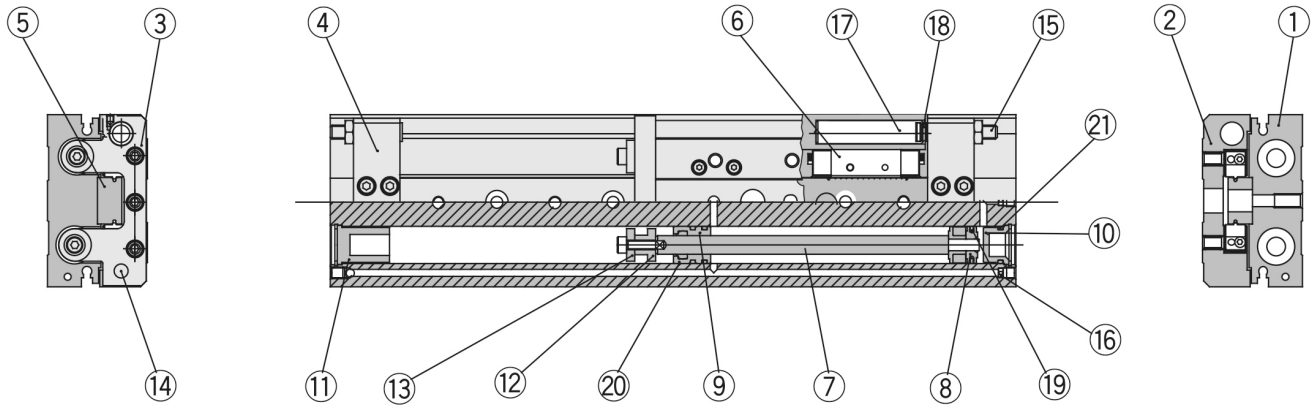


## Component Parts

| No. | Description | Material | Note |
|---|---|---|---|
| ① | Body | Aluminum alloy | Hard anodized |
| ② | Table | Aluminum alloy | Hard anodized |
| ③ | End plate | Aluminum alloy | Hard anodized |
| ④ | Stroke adjuster block | Aluminum alloy | Hard anodized |
| ⑤ | Rail | High carbon chrom bearing steel | Heat treatment |
| ⑥ | Guide block | High carbon chrom bearing steel | Heat treatment |
| ⑦ | Rod | Stainless steel | |
| ⑧ | Piston Assembly | — | With magnet |
| ⑨ | Rod cover | Aluminum alloy | |
| ⑩ | Head cap | Resin | |
| ⑪ | End cap | Resin | |
| ⑫ | Floating bushing A | Stainless steel | |
| ⑬ | Floating bushing B | Stainless steel | |
| ⑭ | Stopper | Stainless steel | Heat treatment |
| ⑮ | Stroke adjuster bolt | Carbon steel | Electroless nickel plated,Heat treatment |
| ⑯ | Orifice | Brass | Electroless nickel plated |
| ⑰ | Absorber shaft | Aluminum alloy | Chromated |
| ⑱ | Adjust bumper | Polyurethane | |
| ⑲ | Piston seal | NBR | |
| ⑳ | Rod seal | NBR | |
| ㉑ | O ring | NBR | |

Specifications are subject to change without prior notice and any obligation on the part of the manufacturer.



SMC CORPORATION Zuazobidea 14, 01012, Vitoria-Gasteiz, Álava +34 945184100 +34 945184126 www.smc.eu support.marketingeurope@smc.com

## Additional information

Catalogue MXW_EU.pdf

Specifications are subject to change without prior notice and any obligation on the part of the manufacturer.



SMC CORPORATION Zuazobidea 14, 01012, Vitoria-Gasteiz, Álava +34 945184100 +34 945184126 www.smc.eu support.marketingeurope@smc.com