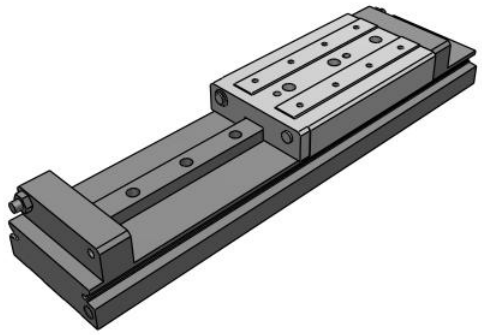

MXW, Long Stroke Precision Slide Table (Recirculating Bearings) - Mechanically Coupled

MXW20TF-150

Datasheet

General series information

The MXW is a long stroke slide table designed for strokes up to 10 inches (300mm). Stroke adjustment is standard with optional shock absorbers. The rigid table makes the MXW ideal for precise transfer of loads.

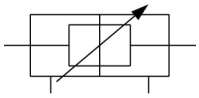

Double-acting cylinder with cushioning adjustable at both ends, double piston rod

Standard specifications

Bore Size	20 mm
Thread Type	TF (G)
Stroke	150 mm
Option	Standard (w/Urethane Bumper)
Auto Switch	No Switch
Lead Wire or Pre-wired Connector	0.5 m (Or None in the Case of No Switch)
Number	2 pcs. (Or None in Case of No Switch)
Maximum operating pressure	0,7 MPa
Minimum operating pressure	0,15 Mpa
Proof pressure	1,05 MPa
Maximum ambient temperature	60 ºC
Minimum ambient temperature	-10 ºC
Theoretical cylinder force, advance stroke (at 0.5 MPa)	314 N
Theoretical cylinder force, return stroke (at 0.5 MPa)	236 N
Maximum piston speed	500 mm/s
Type of cushioning	"Both ends urethane bumper (standard) Both ends shock absorber (option)"
Minimum piston speed	50 mm/s
Port size	1/8
Lubrication	Non-Lube
Circulating fluid	Air

Specifications are subject to change without prior notice and any obligation on the part of the manufacturer.

SMC CORPORATION Zuazobidea 14, 01012, Vitoria-Gasteiz, Álava +34 945184100 +34 945184126 www.smc.eu support.marketingeurope@smc.com

Action	Double acting
Weight	5.000 Kg

Specifications are subject to change without prior notice and any obligation on the part of the manufacturer.

SMC CORPORATION Zuazobidea 14, 01012, Vitoria-Gasteiz, Álava +34 945184100 +34 945184126 www.smc.eu support.marketingeurope@smc.com

Dimensions

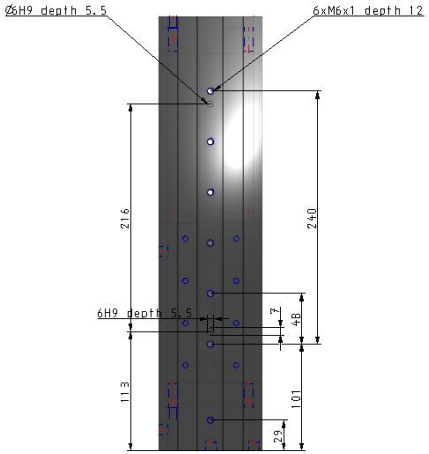

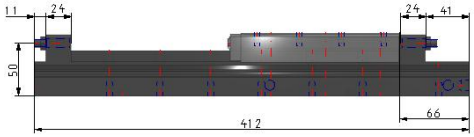

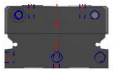

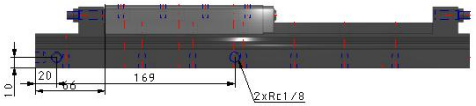

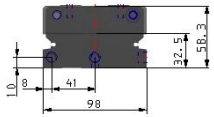

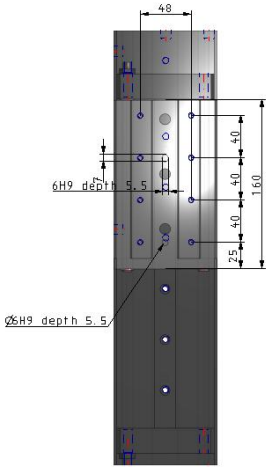

Specifications are subject to change without prior notice and any obligation on the part of the manufacturer.

SMC CORPORATION Zuazobidea 14, 01012, Vitoria-Gasteiz, Álava +34 945184100 +34 945184126 www.smc.eu support.marketingeurope@smc.com

Constructions

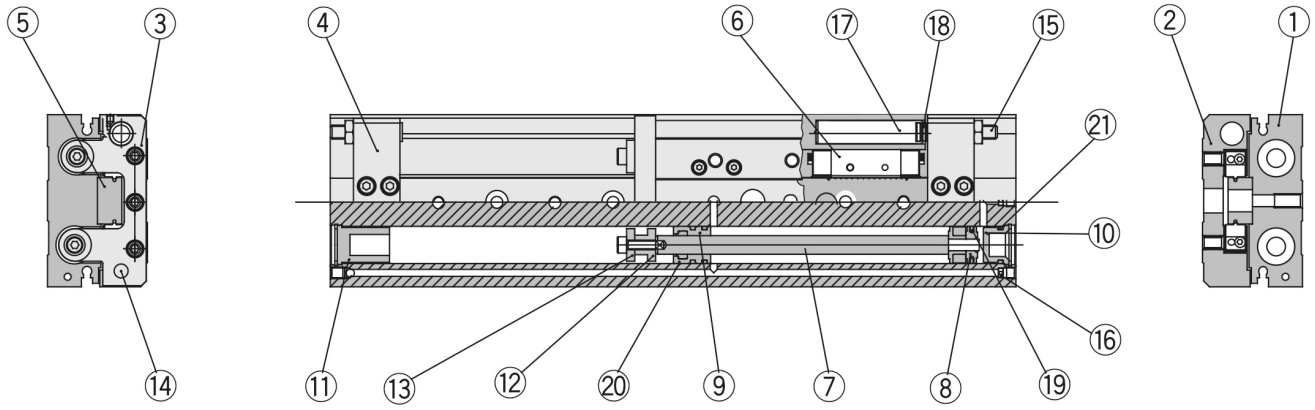

Component Parts

No.	Description	Material	Note
①	Body	Aluminum alloy	Hard anodized
②	Table	Aluminum alloy	Hard anodized
③	End plate	Aluminum alloy	Hard anodized
④	Stroke adjuster block	Aluminum alloy	Hard anodized
⑤	Rail	High carbon chrom bearing steel	Heat treatment
⑥	Guide block	High carbon chrom bearing steel	Heat treatment
⑦	Rod	Stainless steel	
⑧	Piston Assembly	—	With magnet
⑨	Rod cover	Aluminum alloy	
⑩	Head cap	Resin	
⑪	End cap	Resin	
⑫	Floating bushing A	Stainless steel	
⑬	Floating bushing B	Stainless steel	
⑭	Stopper	Stainless steel	Heat treatment
⑮	Stroke adjuster bolt	Carbon steel	Electroless nickel plated,Heat treatment
⑯	Orifice	Brass	Electroless nickel plated
⑰	Absorber shaft	Aluminum alloy	Chromated
⑱	Adjust bumper	Polyurethane	
⑲	Piston seal	NBR	
⑳	Rod seal	NBR	
㉑	O ring	NBR	

Specifications are subject to change without prior notice and any obligation on the part of the manufacturer.

SMC CORPORATION Zuazobidea 14, 01012, Vitoria-Gasteiz, Álava +34 945184100 +34 945184126 www.smc.eu support.marketingeurope@smc.com

Additional information

Catalogue MXW_EU.pdf

Specifications are subject to change without prior notice and any obligation on the part of the manufacturer.

SMC CORPORATION Zuazobidea 14, 01012, Vitoria-Gasteiz, Álava +34 945184100 +34 945184126 www.smc.eu support.marketingeurope@smc.com