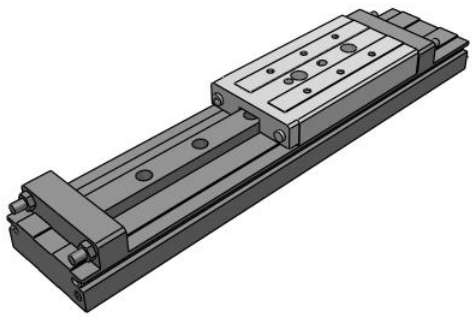

MXW, Long Stroke Precision Slide Table (Recirculating Bearings) - Mechanically Coupled

MXW12-100B

Datasheet

General series information

The MXW is a long stroke slide table designed for strokes up to 10 inches (300mm). Stroke adjustment is standard with optional shock absorbers. The rigid table makes the MXW ideal for precise transfer of loads.

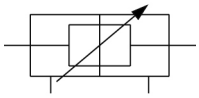

Double-acting cylinder with cushioning adjustable at both ends, double piston rod

Standard specifications

Bore Size	12mm
Stroke	100mm
Lead Wire or Prewired Connector	0.5m (Or None in the Case of No Switch)
Number	2 pcs. (Or None in the Case of No Switch)
Option	B (2 Shock Absorbers)
Auto Switch	No Switch
Thread Type	Bore 8-16: M Thread, Bore 20-25: Rc
Maximum operating pressure	0,7 MPa
Minimum operating pressure	0,15 Mpa
F007-MIN_OP_PRESSURE	0,15 MPa
Proof pressure	1,05 MPa
Maximum ambient temperature	60 ºC
Minimum ambient temperature	-10 ºC
Theoretical cylinder force, advance stroke (at 0.5 MPa)	113 N
Theoretical cylinder force, return stroke (at 0.5 MPa)	85 N
Maximum piston speed	500 mm/s
Type of cushioning	"Both ends urethane bumper (standard) Both ends shock absorber (option)"
Minimum piston speed	50 mm/s
Port size	M5
Lubrication	Non-lube

Specifications are subject to change without prior notice and any obligation on the part of the manufacturer.

SMC United Kingdom +34 945184126 sales@smc.uk

Circulating fluid	Air
Action	Double acting
Weight	1.140 Kg

Specifications are subject to change without prior notice and any obligation on the part of the manufacturer.

SMC United Kingdom +34 945184126 sales@smc.uk

Dimensions

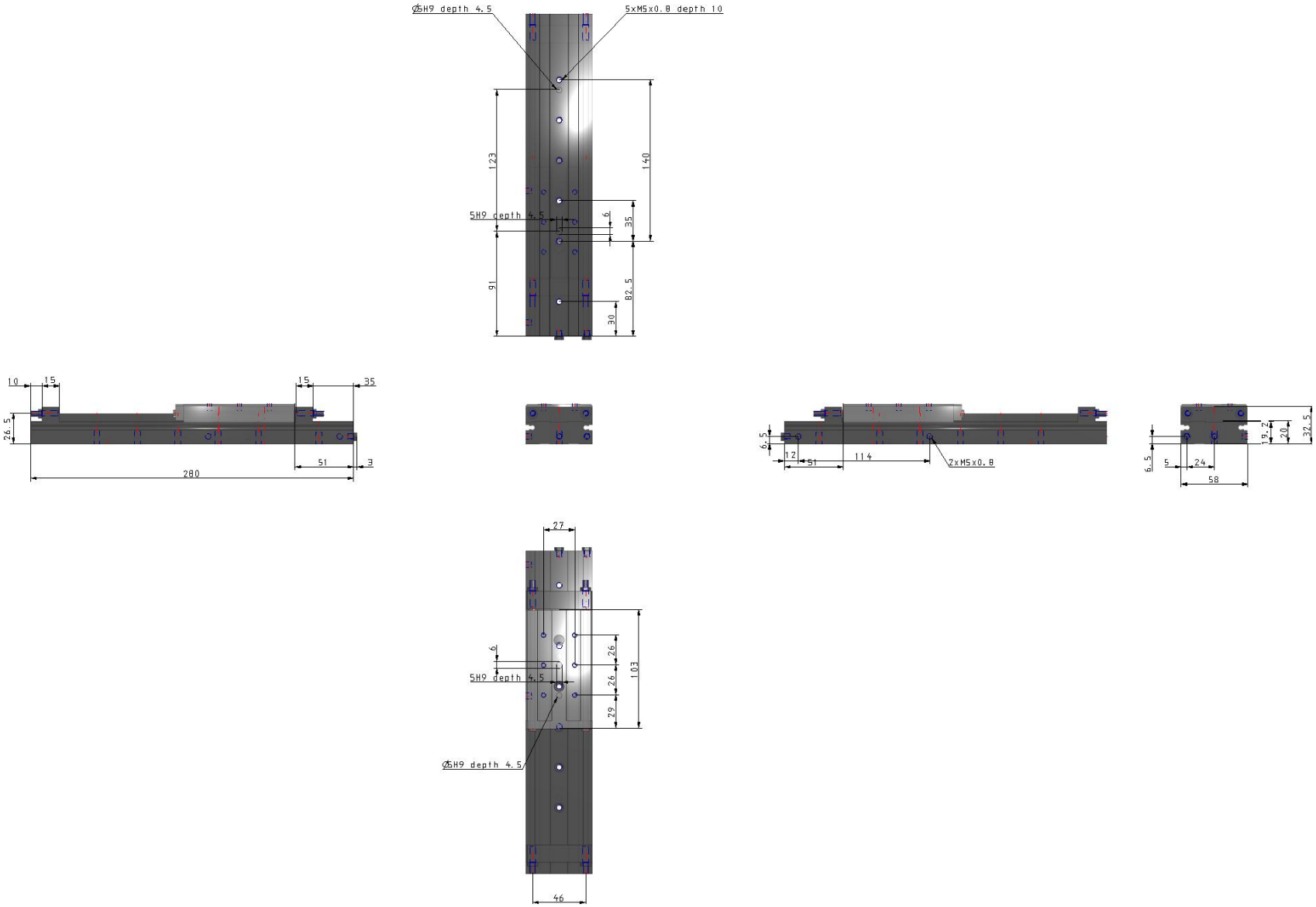

Specifications are subject to change without prior notice and any obligation on the part of the manufacturer.

Constructions

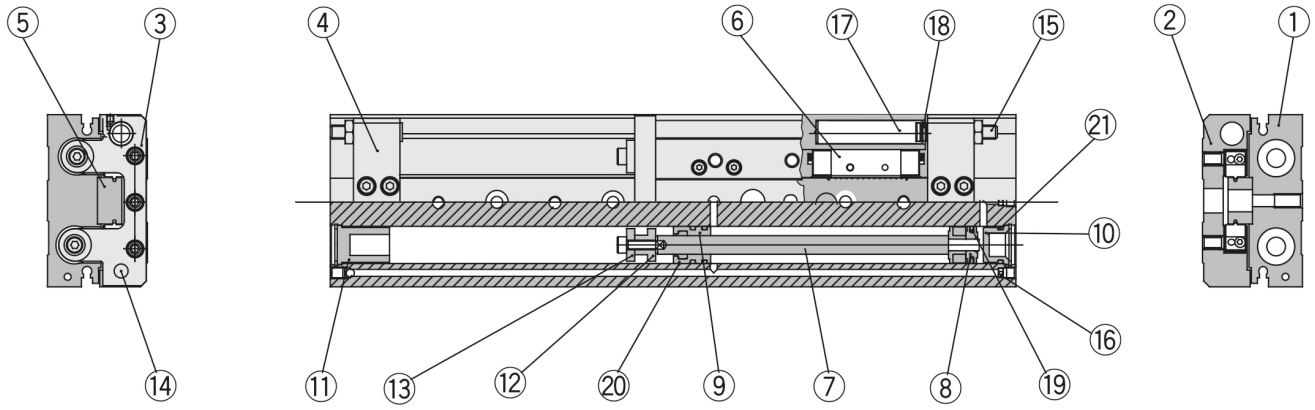

Component Parts

No.	Description	Material	Note
①	Body	Aluminum alloy	Hard anodized
②	Table	Aluminum alloy	Hard anodized
③	End plate	Aluminum alloy	Hard anodized
④	Stroke adjuster block	Aluminum alloy	Hard anodized
⑤	Rail	High carbon chrom bearing steel	Heat treatment
⑥	Guide block	High carbon chrom bearing steel	Heat treatment
⑦	Rod	Stainless steel	
⑧	Piston Assembly	—	With magnet
⑨	Rod cover	Aluminum alloy	
⑩	Head cap	Resin	
⑪	End cap	Resin	
⑫	Floating bushing A	Stainless steel	
⑬	Floating bushing B	Stainless steel	
⑭	Stopper	Stainless steel	Heat treatment
⑮	Stroke adjuster bolt	Carbon steel	Electroless nickel plated,Heat treatment
⑯	Orifice	Brass	Electroless nickel plated
⑰	Absorber shaft	Aluminum alloy	Chromated
⑱	Adjust bumper	Polyurethane	
⑲	Piston seal	NBR	
⑳	Rod seal	NBR	
㉑	O ring	NBR	

Specifications are subject to change without prior notice and any obligation on the part of the manufacturer.

SMC United Kingdom +34 945184126 sales@smc.uk

Additional information

Catalogue	MXW_EU.pdf

Specifications are subject to change without prior notice and any obligation on the part of the manufacturer.

SMC United Kingdom +34 945184126 sales@smc.uk