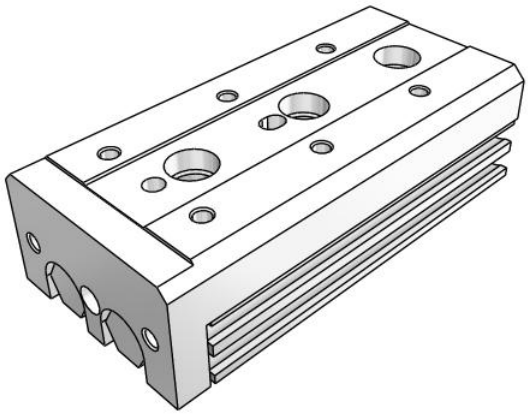

# MXS, Air Slide Table, Cross Roller Guide

## MXS6-30

Datasheet

## General series information

- Air slide table
- Bore size: 6, 8, 12, 16, 20, 25 (mm)
- Strokes: 5mm to 150mm, depending upon bore size
- With or without stroke adjuster with or without shock
- Options: buffer, end lock, axial piping
- Variety of switches with a variety of wire lead lengths

*Double-acting, single-rod cylinder*

## Standard specifications

| | |
|---|---|
| Bore Size | 6 mm |
| Function | Standard |
| Stroke | 30 mm |
| Number | 2 pcs. (Or None in the Case of No Switch) |
| Port Thread | Rc |
| Adjuster | w/o Adjuster |
| Lead Wire or Pre-wired Connector | 0.5 m (Or None in the Case of No Switch) |
| Auto Switch | No Switch |
| Pressure medium | Air |
| Maximum temperature of pressure medium with magnet | 60 ºC |
| Minimum temperature of pressure medium with magnet | -10 ºC |
| Maximum operating pressure | 0.7 MPa |
| Minimum operating pressure | 0.15 MPa |
| Proof pressure | 1.05 MPa |
| Maximum ambient temperature with magnet | 60 ºC |
| Minimum ambient temperature with magnet | -10 ºC |
| Number of pneumatic connections | 2 pcs. |

*Specifications are subject to change without prior notice and any obligation on the part of the manufacturer.*



SMC United Kingdom +34 945184126 sales@smc.uk

| | |
|---|---|
| Pneumatic input connection | M3 |
| Mode of operation of drive | Double acting |
| Theoretical cylinder force, advance stroke (at 0.5 MPa) | 29 N |
| Theoretical cylinder force, return stroke (at 0.5 MPa) | 21 N |
| Maximum piston speed | 500 mm/s |
| Type of cushioning | Rubber bumper |
| Minimum piston speed | 50 mm/s |
| Lubrication | Non-lube |
| Weight | 0.115 Kg |

Specifications are subject to change without prior notice and any obligation on the part of the manufacturer.



SMC United Kingdom +34 945184126 sales@smc.uk

# Dimensions

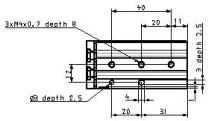


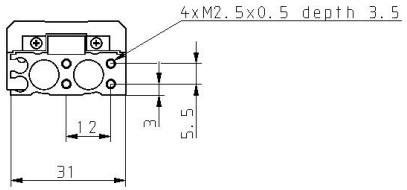


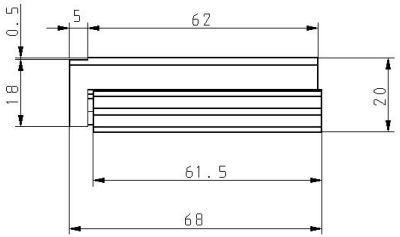


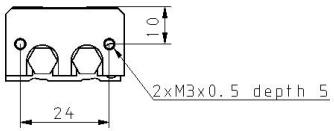


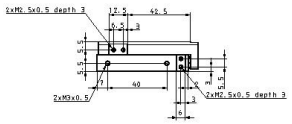


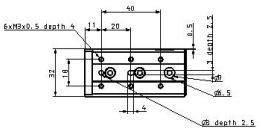


Specifications are subject to change without prior notice and any obligation on the part of the manufacturer.



SMC United Kingdom +34 945184126 sales@smc.uk

# Constructions

## Construction

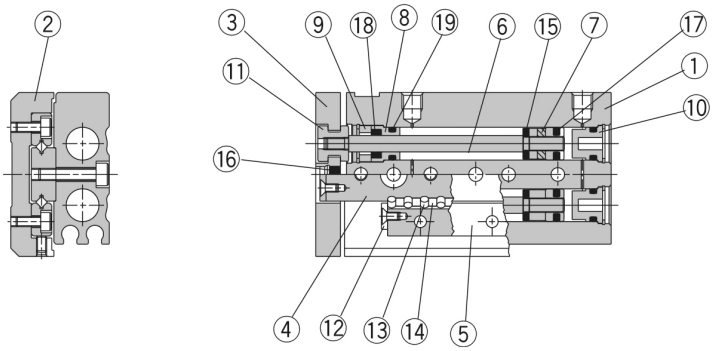


### Component Parts

| No. | Description | Material | Note |
|---|---|---|---|
| ① | Body | Aluminum alloy | Hard anodized |
| ② | Table | Aluminum alloy | Hard anodized |
| ③ | End plate | Aluminum alloy | Hard anodized |
| ④ | Rail | Carbon tool steel | Heat treated |
| ⑤ | Guide | Carbon tool steel | Heat treated |
| ⑥ | Rod | Stainless steel | |
| ⑦ | Piston assembly | | With magnet on one side |
| ⑧ | Rod cover | Aluminum alloy | Anodized |
| ⑨ | Seal support | Brass | Electroless nickel plated |
| ⑩ | Head cap | Resin | |
| ⑪ | Floating bushing | Stainless steel | |
| ⑫ | Roller stopper | Stainless steel | |
| ⑬ | Cylindrical roller | High carbon chrome bearing steel | |
| ⑭ | Roller spacer | Resin | |
| ⑮ | Rod bumper | Polyurethane | |
| ⑯ | End bumper | Polyurethane | |
| ⑰ | Piston seal | NBR | |
| ⑱ | Rod seal | NBR | |
| ⑲ | O-ring | NBR | |

Specifications are subject to change without prior notice and any obligation on the part of the manufacturer.



SMC United Kingdom +34 945184126 sales@smc.uk

## Additional information

Catalogue MXS_EU.pdf

Specifications are subject to change without prior notice and any obligation on the part of the manufacturer.



SMC United Kingdom +34 945184126 sales@smc.uk