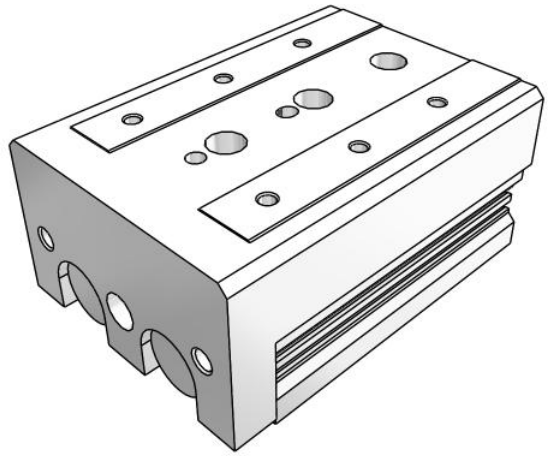

MXS, Air Slide Table, Cross Roller Guide

MXS25TF-50

Datasheet

General series information

- Air slide table
- Bore size: 6, 8, 12, 16, 20, 25 (mm)
- Strokes: 5mm to 150mm, depending upon bore size
- With or without stroke adjuster with or without shock
- Options: buffer, end lock, axial piping
- Variety of switches with a variety of wire lead lengths

Double-acting, single-rod cylinder

Standard specifications

Bore Size	25 mm
Port Thread	TF (G)
Stroke	50 mm
Adjuster	w/o Adjuster
Function	Standard
Auto Switch	No Switch
Lead Wire or Pre-wired Connector	0.5 m (Or None in the Case of No Switch)
Number	2 pcs. (Or None in the Case of No Switch)
Pressure medium	Air
Maximum temperature of pressure medium with magnet	60 ºC
Minimum temperature of pressure medium with magnet	-10 ºC
Maximum operating pressure	0.7 MPa
Minimum operating pressure	0.15 MPa
Proof pressure	1.05 MPa
Maximum ambient temperature with magnet	60 ºC
Minimum ambient temperature with magnet	-10 ºC
Number of pneumatic connections	2 pcs.

Specifications are subject to change without prior notice and any obligation on the part of the manufacturer.

SMC CORPORATION Zuazobidea 14, 01012, Vitoria-Gasteiz, Álava +34 945184100 +34 945184126 www.smc.eu support.marketingeurope@smc.com

Pneumatic input connection	G 1/8
Mode of operation of drive	Double acting
Theoretical cylinder force, advance stroke (at 0.5 MPa)	491 N
Theoretical cylinder force, return stroke (at 0.5 MPa)	378 N
Maximum piston speed	500 mm/s
Type of cushioning	Rubber bumper
Minimum piston speed	50 mm/s
Lubrication	Non-lube

Specifications are subject to change without prior notice and any obligation on the part of the manufacturer.

SMC CORPORATION Zuazobidea 14, 01012, Vitoria-Gasteiz, Álava +34 945184100 +34 945184126 www.smc.eu support.marketingeurope@smc.com

Dimensions

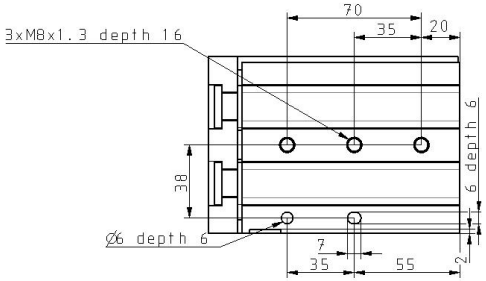

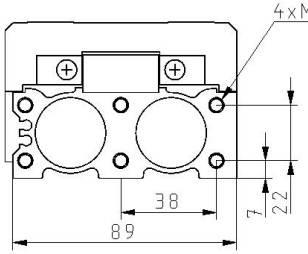

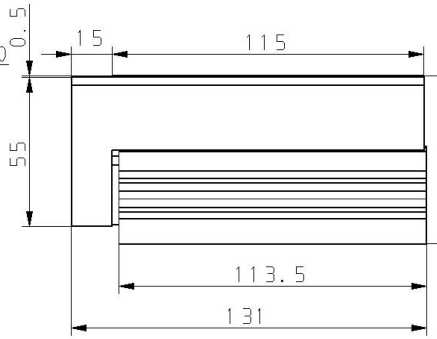

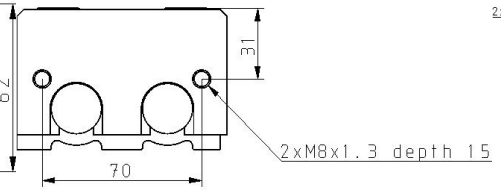

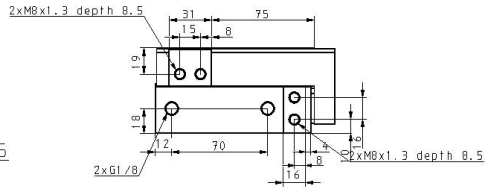

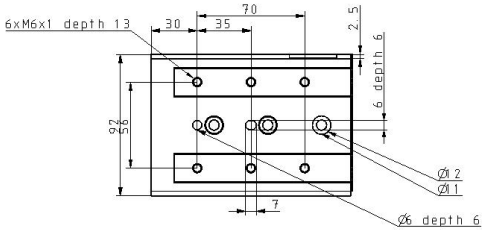

Specifications are subject to change without prior notice and any obligation on the part of the manufacturer.

SMC CORPORATION Zuazobidea 14, 01012, Vitoria-Gasteiz, Álava +34 945184100 +34 945184126 www.smc.eu support.marketingeurope@smc.com

Constructions

Construction

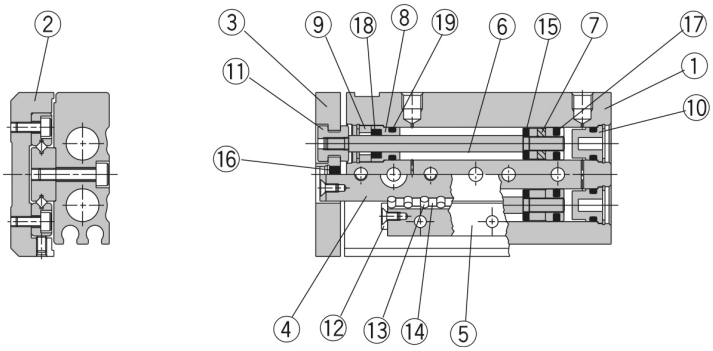

Component Parts

No.	Description	Material	Note
①	Body	Aluminum alloy	Hard anodized
②	Table	Aluminum alloy	Hard anodized
③	End plate	Aluminum alloy	Hard anodized
④	Rail	Carbon tool steel	Heat treated
⑤	Guide	Carbon tool steel	Heat treated
⑥	Rod	Stainless steel	
⑦	Piston assembly		With magnet on one side
⑧	Rod cover	Aluminum alloy	Anodized
⑨	Seal support	Brass	Electroless nickel plated
⑩	Head cap	Resin	
⑪	Floating bushing	Stainless steel	
⑫	Roller stopper	Stainless steel	
⑬	Cylindrical roller	High carbon chrome bearing steel	
⑭	Roller spacer	Resin	
⑮	Rod bumper	Polyurethane	
⑯	End bumper	Polyurethane	
⑰	Piston seal	NBR	
⑱	Rod seal	NBR	
⑲	O-ring	NBR	

Specifications are subject to change without prior notice and any obligation on the part of the manufacturer.

SMC CORPORATION Zuazobidea 14, 01012, Vitoria-Gasteiz, Álava +34 945184100 +34 945184126 www.smc.eu support.marketingeurope@smc.com

Additional information

Catalogue MXS_EU.pdf

Specifications are subject to change without prior notice and any obligation on the part of the manufacturer.

SMC CORPORATION Zuazobidea 14, 01012, Vitoria-Gasteiz, Álava +34 945184100 +34 945184126 www.smc.eu support.marketingeurope@smc.com