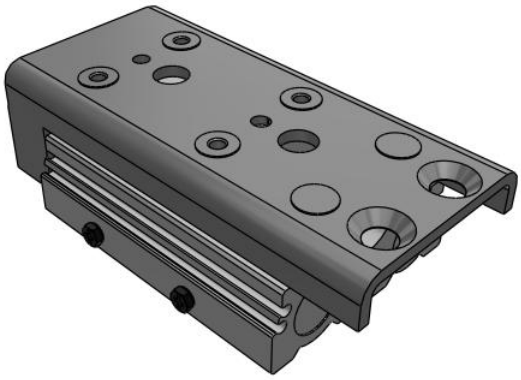

MXQ*B-Z, Air Slide Table, Low Thrust with High Rigidity Type

MXQ20B-30Z

Datasheet

General series information

- Higher rigidity: Guide rigidity improved by 50%.
- Up to 23% more compact.
- Up to 44% lighter.
- 55% Less air consumption.

Standard specifications

Bore Size	20 mm
Body Option	B (Standard)
Stroke	30 mm
Adjuster Option	Z (Without Adjuster)
Auto Switch	No Switch
Lead Wire or Pre-wired Connector	0.5 m (Or None in the Case of No Switch)
Number	2 pcs. (Or None in Case of No Switch)
Made to Order	None
Pressure medium	Compressed air
Maximum temperature of pressure medium	60 ºC
Minimum temperature of pressure medium	-10 ºC
Maximum operating pressure	0.7 MPa
Minimum operating pressure	0.15 MPa
Proof pressure	1.05 MPa
Maximum ambient temperature	60 ºC
Minimum ambient temperature	-10 ºC
Number of pneumatic connections	2 pcs.
Pneumatic input connection	M5 x 0.8
Mode of operation of drive	Double acting

Specifications are subject to change without prior notice and any obligation on the part of the manufacturer.

SMC CORPORATION Zuazobidea 14, 01012, Vitoria-Gasteiz, Álava +34 945184100 +34 945184126 www.smc.eu support.marketingeurope@smc.com

Theoretical cylinder force, advance stroke (at 0.5 MPa)	314 N
Theoretical cylinder force, return stroke (at 0.5 MPa)	264 N
Maximum piston speed	300 mm/s
Type of cushioning	Internal rubber bumper
Weight	1.300 Kg

Specifications are subject to change without prior notice and any obligation on the part of the manufacturer.

SMC CORPORATION Zuazobidea 14, 01012, Vitoria-Gasteiz, Álava +34 945184100 +34 945184126 www.smc.eu support.marketingeurope@smc.com

Dimensions

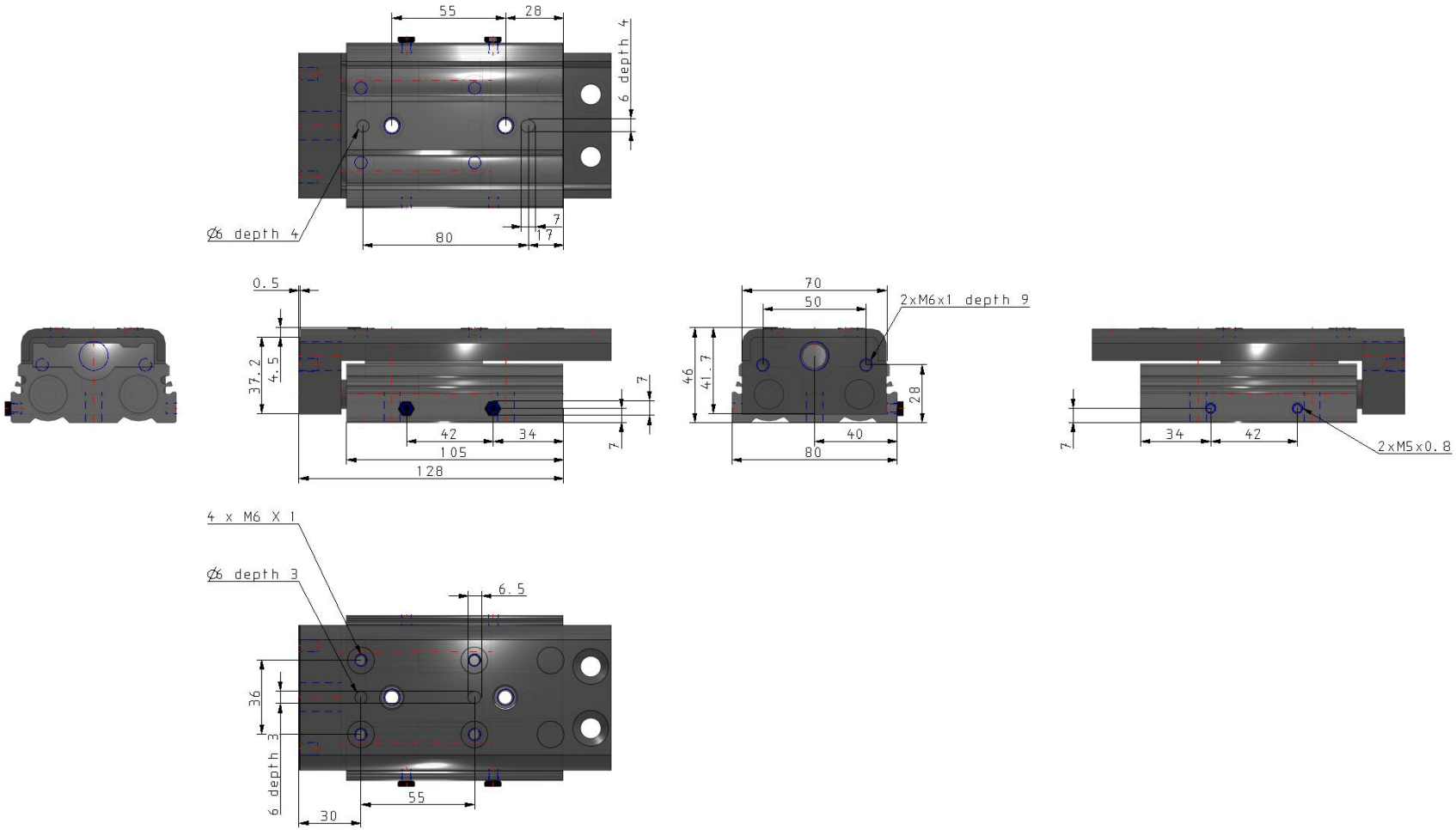

Specifications are subject to change without prior notice and any obligation on the part of the manufacturer.

SMC CORPORATION Zuazobidea 14, 01012, Vitoria-Gasteiz, Álava +34 945184100 +34 945184126 www.smc.eu support.marketingeurope@smc.com

Additional information

Catalogue	MXQ-Z-C_EU.pdf
Operation manuals	OM_MXQ-Z_OMP0038EN-D.pdf

Specifications are subject to change without prior notice and any obligation on the part of the manufacturer.

SMC CORPORATION Zuazobidea 14, 01012, Vitoria-Gasteiz, Álava +34 945184100 +34 945184126 www.smc.eu support.marketingeurope@smc.com