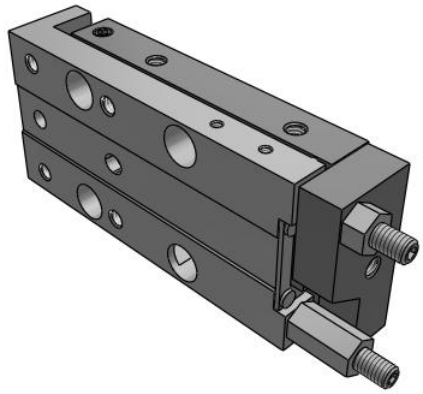

MXJ, Miniature High Precision Slide Table (ø4.5, ø6, ø8)

MXJ8-15CN

Datasheet

General series information

- Strokes up to 20 mm.
- Front and top mounting.
- Travelling parallelism: 0.005 mm.
- Clean room specification available.
- Operating pressure range: 0.15 to 0.7 MPa.

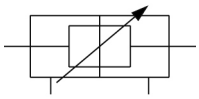

Double-acting cylinder with cushioning adjustable at both ends, double piston rod

Standard specifications

Specifications	Standard Type
Bore Size	8mm
Symmetric	Standard
Stroke	15 mm
Adjuster	C (Metal Stopper Both Ends)
Function	w/o Axial Piping
Switch Rail	N (w/o Magnet and Rail)
Auto Switch	No Switch
Lead Wire or Pre-wired Connector	0.5 m (Or None in the Case of No Auto Switch)
Number	2 pcs. (Or None in Case of No Switch)
Maximum operating pressure	0.7 MPa
Minimum operating pressure	0.15 MPa
Proof pressure	1.05 MPa
Maximum ambient temperature	60 ºC
Minimum ambient temperature	-10 ºC
Conform to the European RoHS Directive	Conform
Maximum piston speed	200 mm/s
Minimum piston speed	50 mm/s

Specifications are subject to change without prior notice and any obligation on the part of the manufacturer.

SMC CORPORATION Zuazobidea 14, 01012, Vitoria-Gasteiz, Álava +34 945184100 +34 945184126 www.smc.eu support.marketingeurope@smc.com

Port size	M3
Lubrication	Non-Lube
Circulating fluid	Air
Stroke length tolerance	+ 1~0 mm
Action	Double Acting
Weight	0.104 Kg

Specifications are subject to change without prior notice and any obligation on the part of the manufacturer.

SMC CORPORATION Zuazobidea 14, 01012, Vitoria-Gasteiz, Álava +34 945184100 +34 945184126 www.smc.eu support.marketingeurope@smc.com

Dimensions

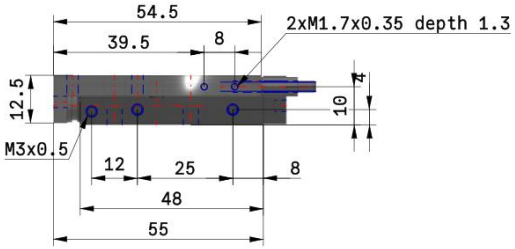

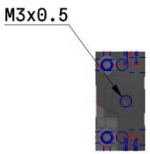

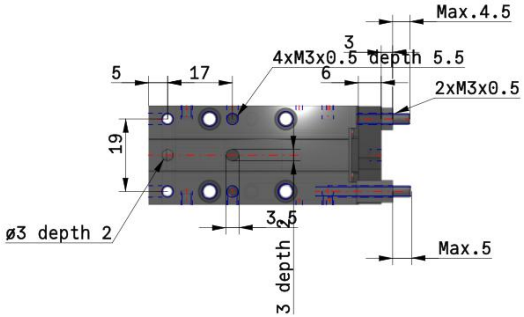

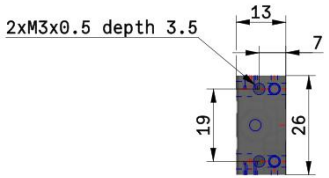

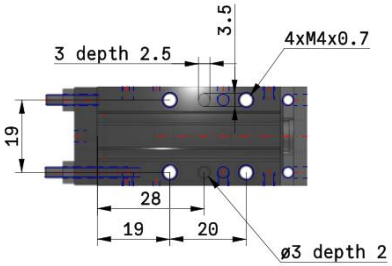

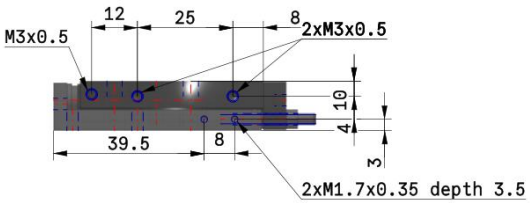

Specifications are subject to change without prior notice and any obligation on the part of the manufacturer.

SMC CORPORATION Zuazobidea 14, 01012, Vitoria-Gasteiz, Álava +34 945184100 +34 945184126 www.smc.eu support.marketingeurope@smc.com

Constructions

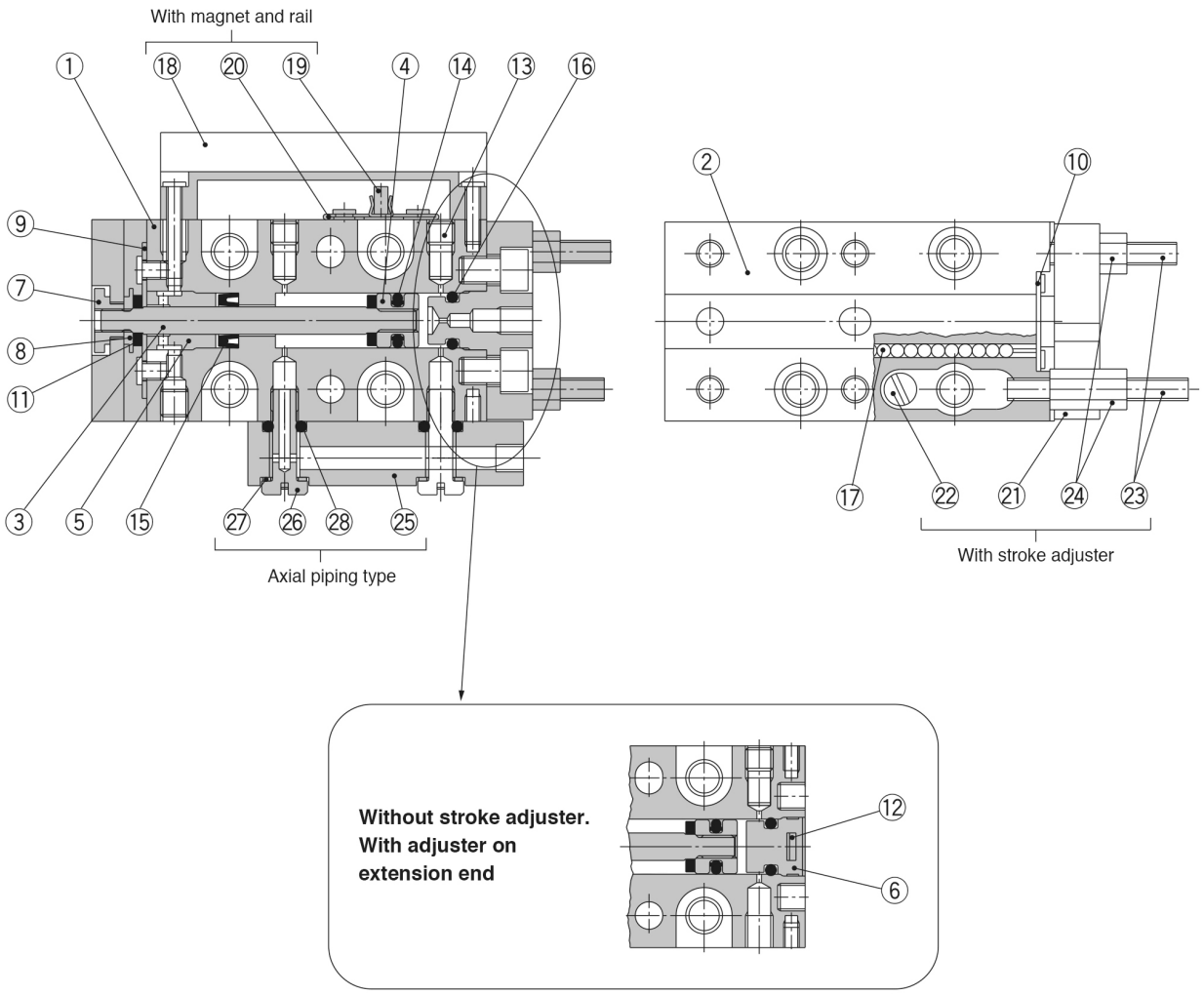

Component Parts

No.	Description	Material	Note
1	Body	Martensitic stainless steel Note)	Heat treated
2	Table	Martensitic stainless steel Note)	Heat treated
3	Rod	Stainless steel	
4	Piston	Brass	Electroless nickel plated
5	Rod cover	Resin	
6	Head cap	Resin	
7	Floating bushing A	Stainless steel	
8	Floating bushing B	Stainless steel	
9	Roller stopper A	Stainless steel	
10	Roller stopper B	Stainless steel	
11	Rod bumper	Polyurethane	
12	Plate	Stainless steel	
13	Plug	Steel + Fluorine	Nickel plated
14	Piston seal	NBR	
15	Rod seal	NBR	
16	O-ring	NBR	
17	Steel balls	High carbon chrome bearing steel	

Note) Use caution because the martensitic stainless steel is inferior in corrosiveness when compared with austenitic stainless steel.

Specifications are subject to change without prior notice and any obligation on the part of the manufacturer.

SMC CORPORATION Zuazobidea 14, 01012, Vitoria-Gasteiz, Álava +34 945184100 +34 945184126 www.smc.eu support.marketingeurope@smc.com

Additional information

Catalogue	MXJ-B_EU.pdf

Specifications are subject to change without prior notice and any obligation on the part of the manufacturer.

SMC CORPORATION Zuazobidea 14, 01012, Vitoria-Gasteiz, Álava +34 945184100 +34 945184126 www.smc.eu support.marketingeurope@smc.com