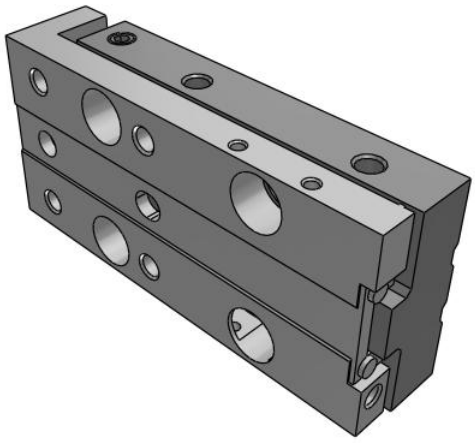

# MXJ, Miniature High Precision Slide Table (ø4.5, ø6, ø8)

## MXJ6-15N

Datasheet

## General series information

- Strokes up to 20 mm.
- Front and top mounting.
- Travelling parallelism: 0.005 mm.
- Clean room specification available.
- Operating pressure range: 0.15 to 0.7 MPa.

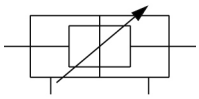

*Double-acting cylinder with cushioning adjustable at both ends, double piston rod*

## Standard specifications

| Specifications | Standard Type |
|---|---|
| Bore Size | 6 mm |
| Symmetric | Standard |
| Stroke | 15 mm |
| Adjuster | w/o Adjuster |
| Function | w/o Axial Piping |
| Switch Rail | N (w/o Magnet and Rail) |
| Auto Switch | No Switch |
| Lead Wire or Pre-wired Connector | 0.5 m (Or None in the Case of No Auto Switch) |
| Number | 2 pcs. (Or None in Case of No Switch) |
| Maximum operating pressure | 0.7 MPa |
| Minimum operating pressure | 0.15 MPa |
| Proof pressure | 1.05 MPa |
| Maximum ambient temperature | 60 ºC |
| Minimum ambient temperature | -10 ºC |
| Conform to the European RoHS Directive | Conform |
| Maximum piston speed | 500 mm/s |
| Minimum piston speed | 50 mm/s |

*Specifications are subject to change without prior notice and any obligation on the part of the manufacturer.*



**SMC CORPORATION** Zuazobidea 14, 01012, Vitoria-Gasteiz, Álava +34 945184100 +34 945184126 www.smc.eu support.marketingeurope@smc.com

| | |
|---|---|
| Port size | M3 |
| Lubrication | Non-Lube |
| Circulating fluid | Air |
| Stroke length tolerance | + 1~0 mm |
| Action | Double Acting |
| Weight | 0.072 Kg |

Specifications are subject to change without prior notice and any obligation on the part of the manufacturer.



SMC CORPORATION Zuazobidea 14, 01012, Vitoria-Gasteiz, Álava +34 945184100 +34 945184126 www.smc.eu support.marketingeurope@smc.com

# Dimensions

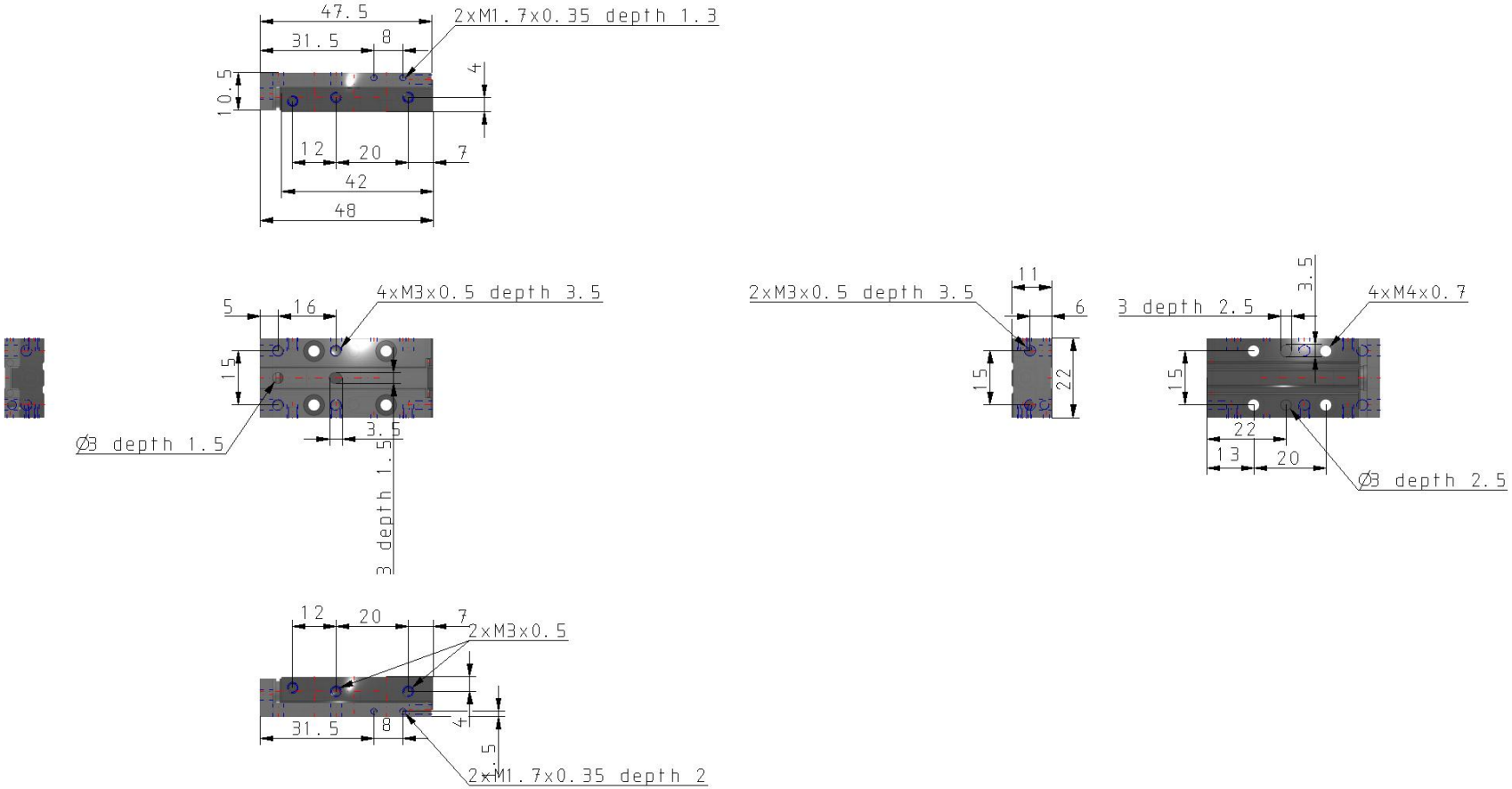


Specifications are subject to change without prior notice and any obligation on the part of the manufacturer.



SMC CORPORATION Zuazobidea 14, 01012, Vitoria-Gasteiz, Álava +34 945184100 +34 945184126 www.smc.eu support.marketingeurope@smc.com

# Constructions

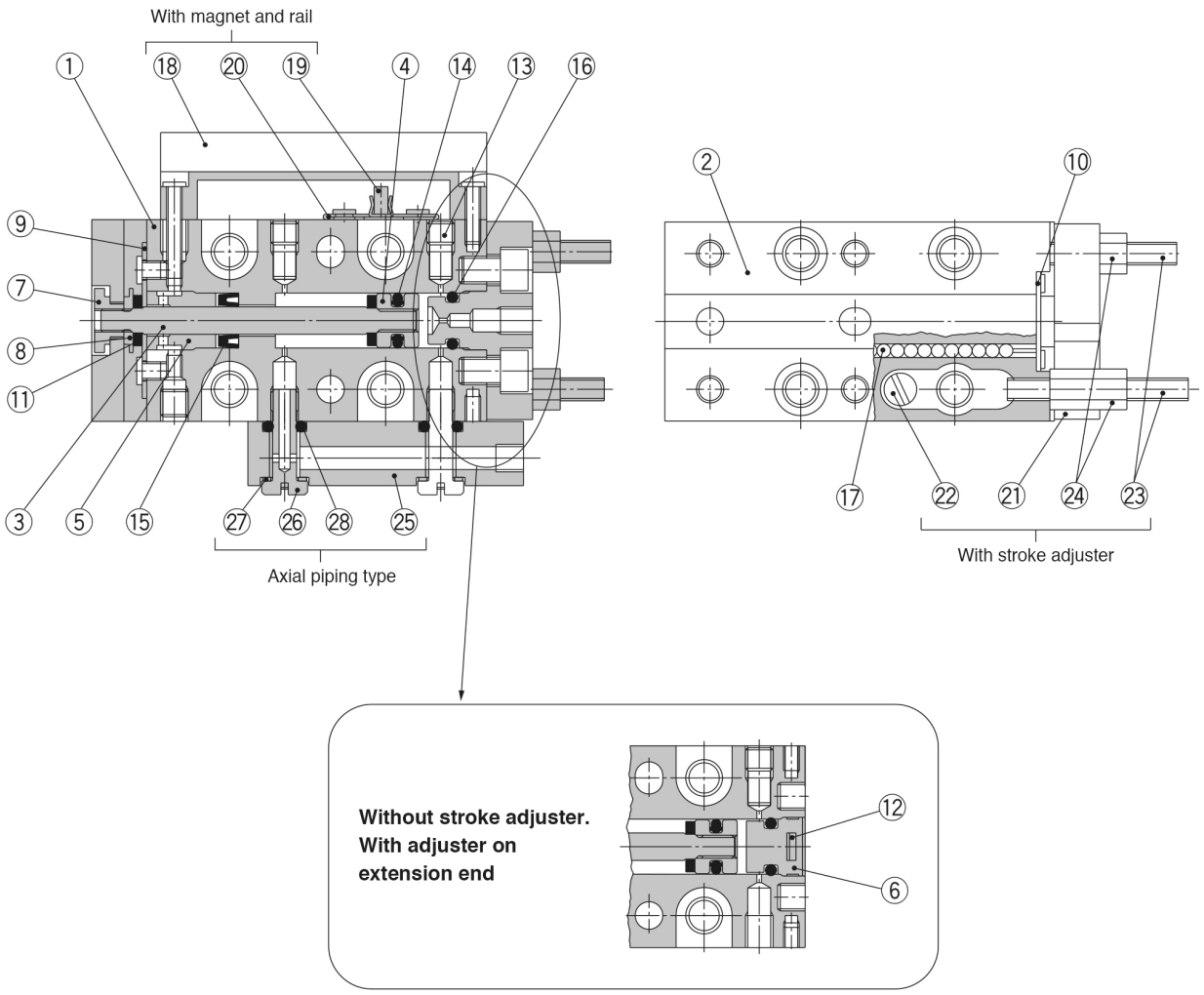


## Component Parts

| No. | Description | Material | Note |
|---|---|---|---|
| 1 | Body | Martensitic stainless steel Note) | Heat treated |
| 2 | Table | Martensitic stainless steel Note) | Heat treated |
| 3 | Rod | Stainless steel | |
| 4 | Piston | Brass | Electroless nickel plated |
| 5 | Rod cover | Resin | |
| 6 | Head cap | Resin | |
| 7 | Floating bushing A | Stainless steel | |
| 8 | Floating bushing B | Stainless steel | |
| 9 | Roller stopper A | Stainless steel | |
| 10 | Roller stopper B | Stainless steel | |
| 11 | Rod bumper | Polyurethane | |
| 12 | Plate | Stainless steel | |
| 13 | Plug | Steel + Fluorine | Nickel plated |
| 14 | Piston seal | NBR | |
| 15 | Rod seal | NBR | |
| 16 | O-ring | NBR | |
| 17 | Steel balls | High carbon chrome bearing steel | |

Note) Use caution because the martensitic stainless steel is inferior in corrosiveness when compared with austenitic stainless steel.

Specifications are subject to change without prior notice and any obligation on the part of the manufacturer.



SMC CORPORATION Zuazobidea 14, 01012, Vitoria-Gasteiz, Álava +34 945184100 +34 945184126 www.smc.eu support.marketingeurope@smc.com

## Additional information

Catalogue MXJ-B_EU.pdf

Specifications are subject to change without prior notice and any obligation on the part of the manufacturer.



SMC CORPORATION Zuazobidea 14, 01012, Vitoria-Gasteiz, Álava +34 945184100 +34 945184126 www.smc.eu support.marketingeurope@smc.com