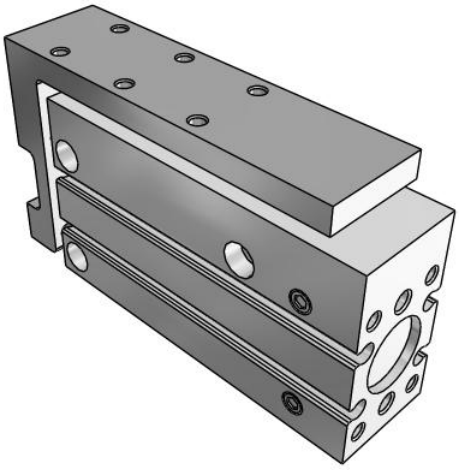

MXH-Z, Compact Slide Table, Linear Guide

MXH16-40Z

Datasheet

General series information

- Bore sizes: 6, 10, 16, 20 mm
- Special (non-standard) porting option
- Rubber bumpers
- RoHS compliant
- Auto switch capable

Double-acting, single-rod cylinder

Standard specifications

Bore Size	16 mm
Stroke	40 mm
Lead Wire or Prewired Connector	0.5m (Or None in the Case of No Switch)
Number	2 pcs. (Or None in the Case of No Switch)
Auto Switch	No Switch
Made to Order	None
Pressure medium	Compressed air
Maximum temperature of pressure medium with magnet	60 ºC
Minimum temperature of pressure medium with magnet	-10 ºC [without condensation]
Maximum operating pressure	0.7 MPa
Minimum operating pressure	0,06 Mpa
Proof pressure	1.05 MPa
Maximum ambient temperature with magnet	60 ºC
Minimum ambient temperature with magnet	-10 ºC [without condensation]
Conform to the European RoHS Directive	Conform
Number of pneumatic connections	2 pcs.
Pneumatic input connection	M5
Mode of operation of drive	Double acting

Specifications are subject to change without prior notice and any obligation on the part of the manufacturer.

SMC United Kingdom +34 945184126 sales@smc.uk

Theoretical cylinder force, advance stroke (at 0.5 MPa)	101 N
Theoretical cylinder force, return stroke (at 0.5 MPa)	86 N
Maximum piston speed	500 mm/s
Type of cushioning	Rubber Bumper
Allowable moment Mp	3,49
Allowable moment My	3,49
Allowable moment Mr	6,47
Allowable kinetic energy	0,05
Weight	0.288 Kg

Specifications are subject to change without prior notice and any obligation on the part of the manufacturer.

SMC United Kingdom +34 945184126 sales@smc.uk

Dimensions

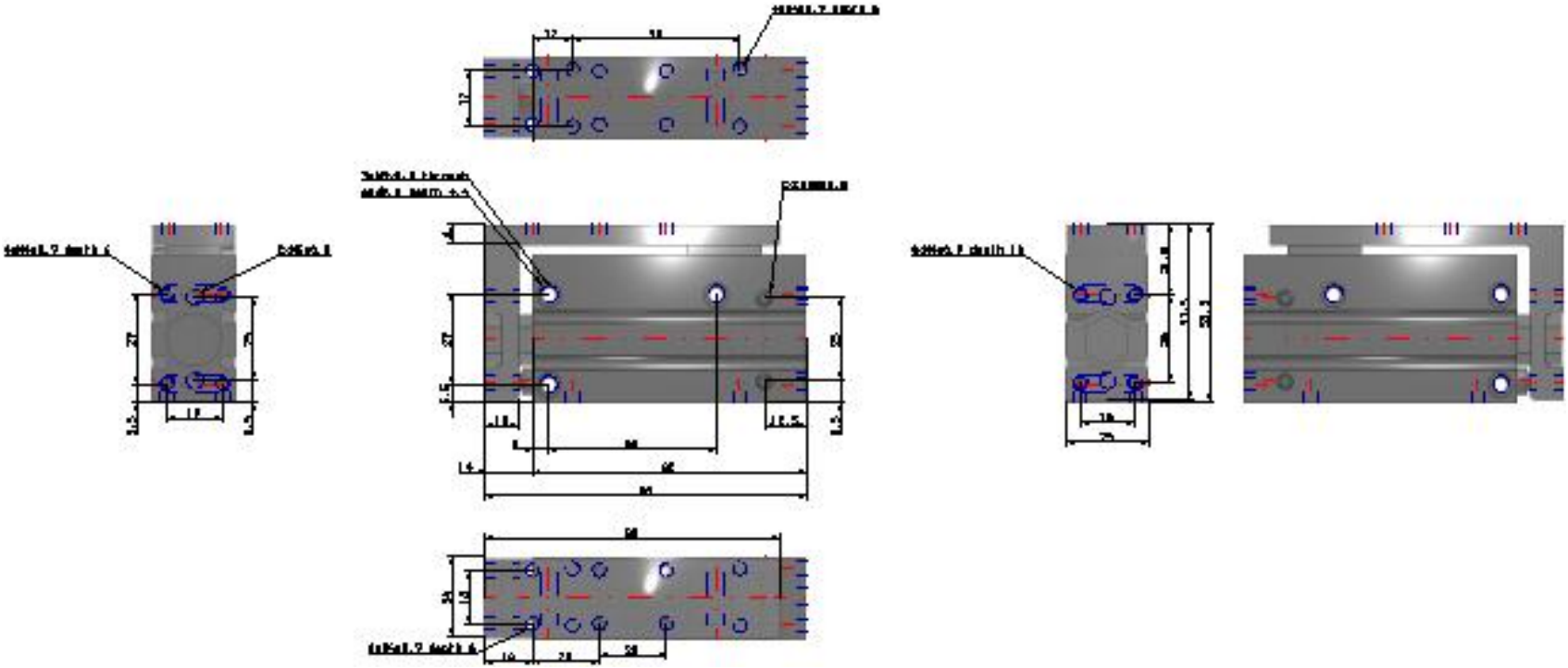

Specifications are subject to change without prior notice and any obligation on the part of the manufacturer.

SMC United Kingdom +34 945184126 sales@smc.uk

Constructions

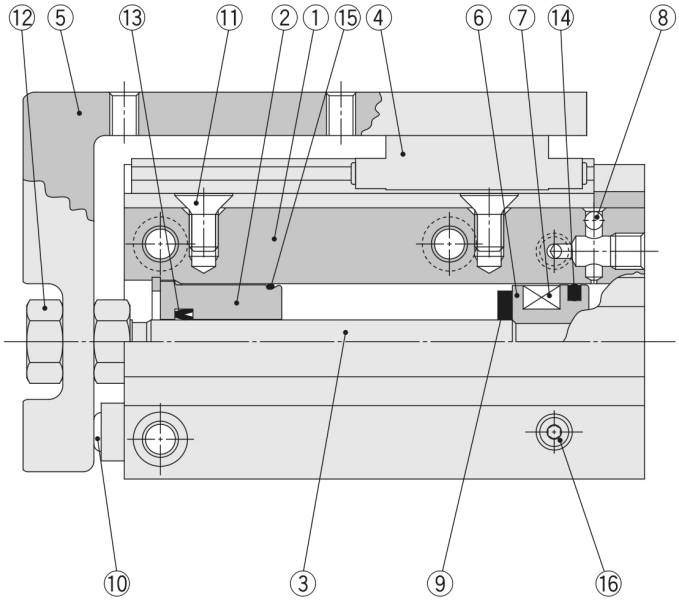

Component Parts

No.	Description	Material	Note
1	**Cylinder tube**	Aluminium alloy	Hard anodised
2	**Rod cover**	Aluminium alloy	Hard anodised
3	**Piston rod**	Stainless steel	
4	**Guide**	The main parts are made of stainless steel.	
5	**Table**	Aluminium alloy	Hard anodised
6	**Piston**	Aluminium alloy	Chromated
7	**Magnet**	Magnetic material	
8	**Steel ball**	Carbon steel	
9	**Bumper**	Urethane	
10	**Bumper**	Urethane	
11	Countersunk head screw	Carbon steel	Nickel plating
12	**Nut**	Brass	Nickel plating
13	**Rod seal**	NBR	
14	**Piston seal**	NBR	
15	**Gasket**	NBR	
16	**Plug**	Carbon steel	Zinc chromated

Note) The MXH series cannot be disassembled.

Specifications are subject to change without prior notice and any obligation on the part of the manufacturer.

SMC United Kingdom +34 945184126 sales@smc.uk

Additional information

Catalogue	MXH-Z-A_EU.pdf
Operation manuals	OM_MXHx_OM0056EN-P.pdf

Specifications are subject to change without prior notice and any obligation on the part of the manufacturer.

SMC United Kingdom +34 945184126 sales@smc.uk