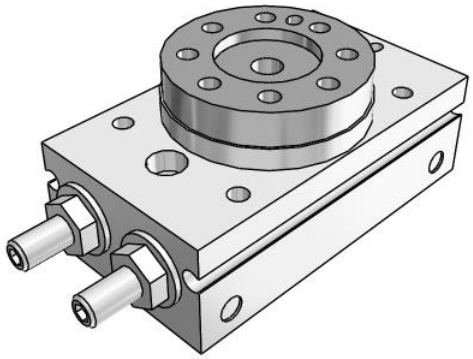

# MSQB1-7, Rotary Table Rack & Pinion Type
## MSQB7A

Datasheet

## General series information

- Compact rotary table, rack-and pinion type
- Sizes: 1, 2, 3, 7
- Universal mounting style
- Wiring and piping can be selected according to mounting conditions
- Angle adjustment range: 0 to 190

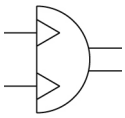

*Semi-rotary actuator, double acting*

## Standard specifications

| | |
|---|---|
| Type | B (Basic Type) |
| Number | 2 pcs. (Or None in Case of No Switch) |
| Size | 7 |
| Model | MSQ |
| Lead Wire or Pre-wired Connector | 0.5 m (Or None in the Case of No Switch) |
| Port Location | Side Port |
| Auto Switch | No Switch |
| Clean Series | None |
| Pressure medium | Compressed air (non-lube) |
| Maximum temperature of pressure medium | 60 °C |
| Minimum temperature of pressure medium | 0 °C |
| Maximum operating pressure | 0.7 MPa |
| Minimum operating pressure | 0.1 MPa |
| Maximum ambient temperature | 60 °C |
| Minimum ambient temperature | 0 °C |
| Number of pneumatic connections | 4 pcs. |
| Pneumatic input connection | M5 |
| Mode of operation of drive | Double acting |

*Specifications are subject to change without prior notice and any obligation on the part of the manufacturer.*



SMC United Kingdom +34 945184126 sales@smc.uk

| | |
|---|---|
| Type of cushioning | Rubber bumper |
| - | 0° to 190° |
| Weight | 0.400 Kg |

Specifications are subject to change without prior notice and any obligation on the part of the manufacturer.



SMC United Kingdom +34 945184126 sales@smc.uk

# Dimensions

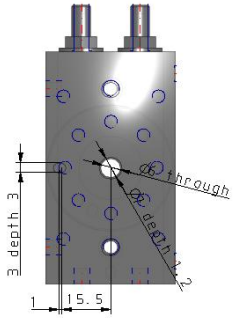


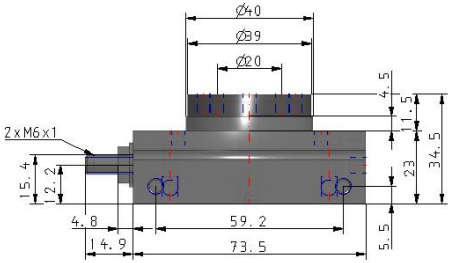


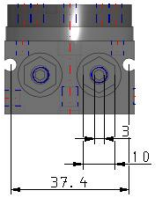


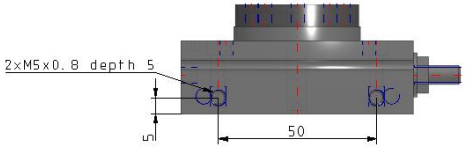


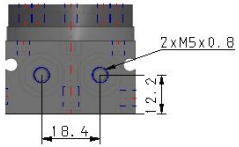


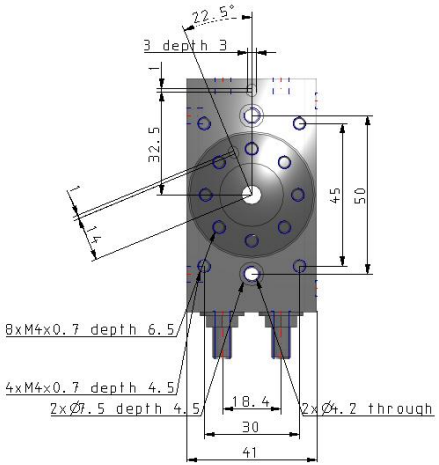


Specifications are subject to change without prior notice and any obligation on the part of the manufacturer.



SMC United Kingdom +34 945184126 sales@smc.uk

# Constructions

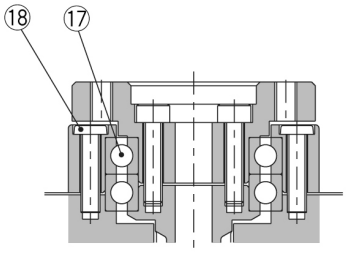


**MSQA□A**
**(High precision type)**

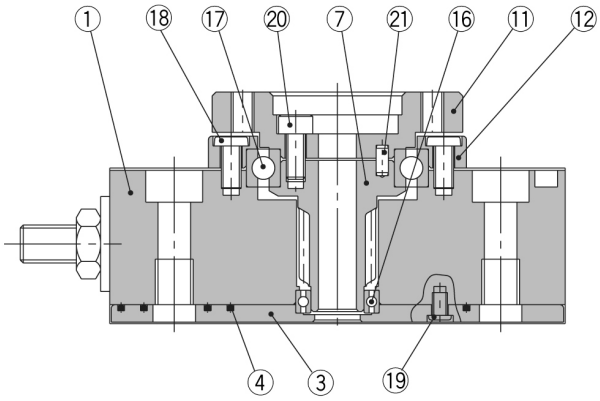


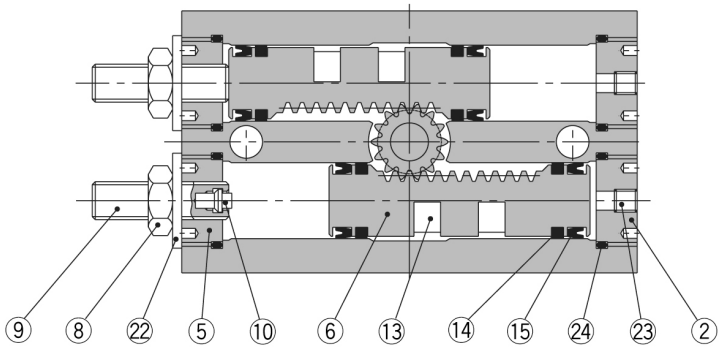


## Component parts

| No. | Description | | Material |
|---|---|---|---|
| 1 | **Body** | | Aluminium alloy |
| 2 | **Cover** | | Aluminium alloy |
| 3 | **Plate** | | Aluminium alloy |
| 4 | **Seal** | | NBR |
| 5 | **End cover** | | Aluminium alloy |
| 6 | **Piston** | | Stainless steel |
| 7 | **Pinion** | | Chrome molybdenum steel |
| 8 | **Hexagon nut** | | Steel wire |
| 9 | **Adjustment bolt** | | Steel wire |
| 10 | **Cushion pad** | **Size: 3, 7** | Rubber material |
| 11 | **Table** | | Aluminium alloy |
| 12 | **Bearing retainer** | | Aluminium alloy |
| 13 | **Magnet** | | Magnetic material |
| 14 | **Wear ring** | | Resin |

| No. | Description | | | Material |
|---|---|---|---|---|
| 15 | **Piston seal** | | | NBR |
| 16 | **Deep groove ball bearing** | | | Bearing steel |
| 17 | **Basic type** | **Deep groove ball bearing** | | Bearing steel |
| | **High precision type** | **Special bearing** | | |
| 18 | **Round head Philips screw No.0** | **Basic type** | **Size: 1 to 3** | Steel wire |
| | **Round head Philips screw** | | **Size: 7** | |
| | **Round head Philips screw** | **High precision type** | | |
| 19 | **Round head Philips screw No.0** | | | Steel wire |
| 20 | **Hexagon socket head set bolt** | | | Stainless steel |
| 21 | **Parallel pin** | | | Carbon steel |
| 22 | **Seal washer** | | | NBR |
| 23 | **Hexagon socket head set screw** | | | Stainless steel |
| 24 | **O-ring** | | | NBR |

*23 The hexagon socket head set screws are tightened at different positions depending on the position of the connecting port.

*Specifications are subject to change without prior notice and any obligation on the part of the manufacturer.*



SMC United Kingdom +34 945184126 sales@smc.uk

## Additional information

| | |
|---|---|
| Catalogue | MSQ_EU.pdf |
| Operation manuals | OM_MSQ_OM0002EN-B.pdf |

Specifications are subject to change without prior notice and any obligation on the part of the manufacturer.



SMC United Kingdom +34 945184126 sales@smc.uk