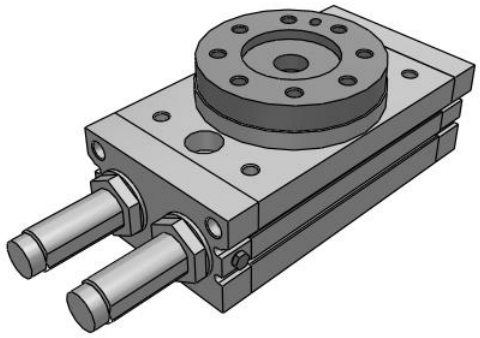

MSQ*10~200, Rotary Table, Rack & Pinion, Basic & High Precision

MSQB70R

Datasheet

General series information

- Rack & Pinion style, rotary table-basic type
- Seven bore sizes available
- Direct load mounting possible
- Adjustment from one direction
- Auto switch capable

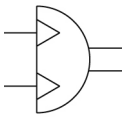

Semi-rotary actuator, double acting

Standard specifications

Suffix	R (Shock Absorbers)
Lead Wire or Prewired Connector	0.5m [Or None in the Case of No Switch]
Number	2 pcs. [Or None in the Case of No Switch]
Precision	B (Basic)
Size	70
Model	MSQ
Auto Switch	No Switch
Thread Type	M5 [10,20]; Rc 1/8 [30,50,70,100,200]
Clean Series	None
Pressure medium	Compressed air (non-lube)
Maximum temperature of pressure medium	60 °C
Minimum temperature of pressure medium	0 °C
Maximum operating pressure	0.6 MPa
Minimum operating pressure	0.1 MPa
Maximum ambient temperature	60 °C
Minimum ambient temperature	0 °C
Number of pneumatic connections	4 pcs.
Pneumatic input connection	R 1/8

Specifications are subject to change without prior notice and any obligation on the part of the manufacturer.

SMC United Kingdom +34 945184126 sales@smc.uk

Mode of operation of drive	Double acting
Type of cushioning	Shock absorber
-	0° to 190°
Weight	2.900 Kg

Specifications are subject to change without prior notice and any obligation on the part of the manufacturer.

SMC United Kingdom +34 945184126 sales@smc.uk

Dimensions

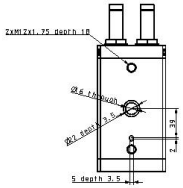

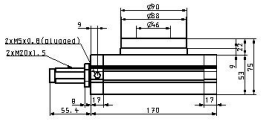

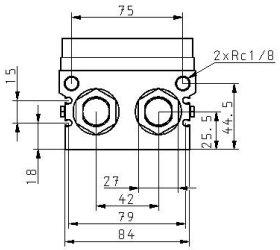

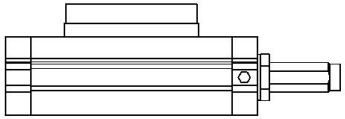

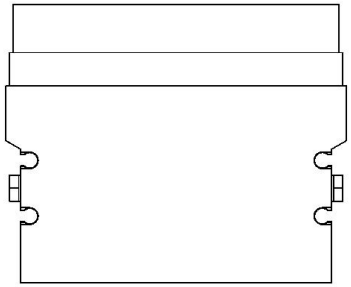

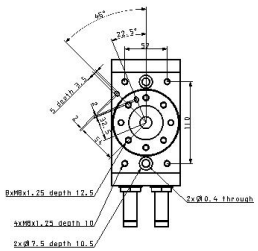

Specifications are subject to change without prior notice and any obligation on the part of the manufacturer.

Constructions

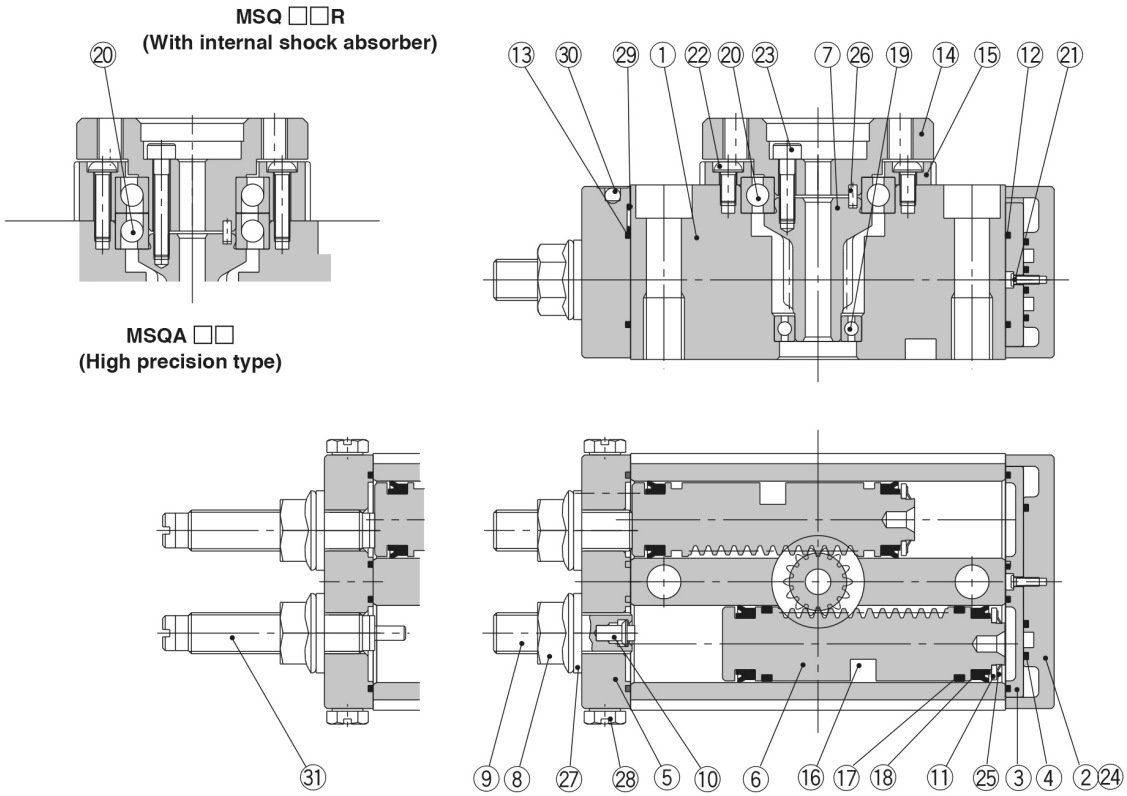

Parts list

No.	Description		Material
1	Body		Aluminium alloy
2	Cover		Aluminium alloy
3	Plate		Aluminium alloy
4	Seal		NBR
5	End cover		Aluminium alloy
6	Piston		Stainless steel
7	Pinion		Chrome molybdenum steel
8	Hexagon nut with flange	Size: 10 to 50	Steel wire
	Hexagon nut	Size: 70 to 200	
9	Adjustment bolt		Chrome molybdenum steel
10	Cushion pad		Rubber material
11	Seal retainer		Aluminium alloy
12	Gasket		NBR
13	Gasket		NBR
14	Table		Aluminium alloy
15	Bearing retainer		Aluminium alloy
16	Magnet		Magnetic material
17	Wear ring		Resin
18	Piston seal		NBR

No.	Description		Material
19	Deep groove ball bearing	Size: 10 to 50	Bearing steel
	Needle bearing	Size: 70 to 200	
20	Deep groove ball bearing	Basic type	Bearing steel
	Angular contact ball bearing	High precision type	
21	Round head philips screw	No.0	Steel wire
22	Round head philips screw	Size: 10	Stainless steel
	Low head cap screw	Size: 20 to 50	Chrome molybdenum steel
	Hexagon socket head set bolt	Size: 70 to 200	
23	Hexagon socket head set bolt		Stainless steel
24	Hexagon socket head set bolt	Size: 10 to 50	Stainless steel
		Size: 70 to 200	Carbon steel
25	CS type snap ring		Spring steel
26	Parallel pin	Size: 10 to 50	Carbon steel
	Parallel key	Size: 70 to 200	
27	Seal washer		NBR
28	Plug		Brass
29	O-ring	Size: 70 to 200 only	NBR
30	Steel balls	Size: 70 to 200 only	Stainless steel
31	Shock absorber		—

Replacement parts

Description	Kit no.							Note
	10	20	30	50	70	100	200	
Seal kit	KT-MSQ10	KT-MSQ20	KT-MSQ30	KT-MSQ50	KT-MSQ70	KT-MSQ100	KT-MSQ200	A set of above numbers ④, ⑫, ⑬, ⑰, ⑱ and ㉗

Specifications are subject to change without prior notice and any obligation on the part of the manufacturer.

SMC United Kingdom +34 945184126 sales@smc.uk

Additional information

Catalogue MSQ_EU.pdf

Specifications are subject to change without prior notice and any obligation on the part of the manufacturer.

SMC United Kingdom +34 945184126 sales@smc.uk