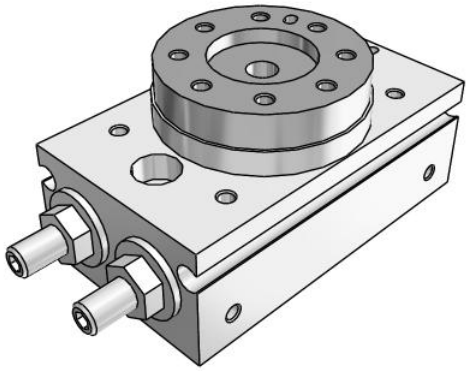

MSQB1-7, Rotary Table Rack & Pinion Type
MSQB3AE

Datasheet

General series information

- Compact rotary table, rack-and pinion type
- Sizes: 1, 2, 3, 7
- Universal mounting style
- Wiring and piping can be selected according to mounting conditions
- Angle adjustment range: 0 to 190

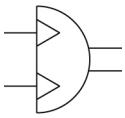

Semi-rotary actuator, double acting

Standard specifications

Type	B (Basic Type)
Lead Wire or Prewired Connector	0.5m [Or None in the Case of No Switch]
Number	2 pcs. (Or None in the Case of No Switch)
Size	3
Model	MSQ
Port Location	E (Front Port)
Auto Switch	No Switch
Clean Series	None
Pressure medium	Compressed air (non-lube)
Maximum temperature of pressure medium	60 °C
Minimum temperature of pressure medium	0 °C
Maximum operating pressure	0.7 MPa
Minimum operating pressure	0.1 MPa
Maximum ambient temperature	60 °C
Minimum ambient temperature	0 °C
Number of pneumatic connections	4 pcs.
Pneumatic input connection	M3
Mode of operation of drive	Double acting

Specifications are subject to change without prior notice and any obligation on the part of the manufacturer.

SMC United Kingdom +34 945184126 sales@smc.uk

Type of cushioning	Rubber bumper
-	0° to 190°
Weight	0.151 Kg

Specifications are subject to change without prior notice and any obligation on the part of the manufacturer.

SMC United Kingdom +34 945184126 sales@smc.uk

Dimensions

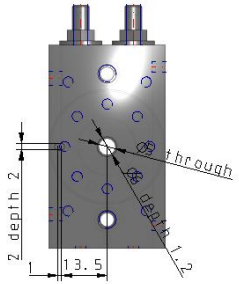

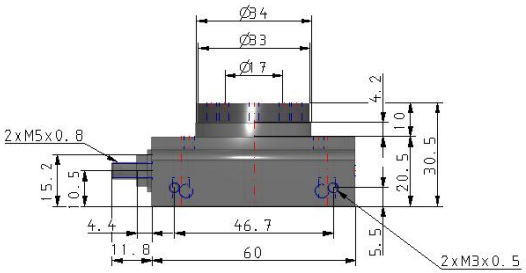

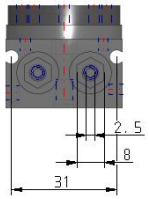

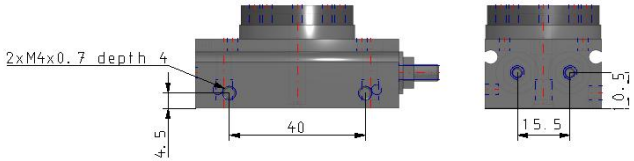

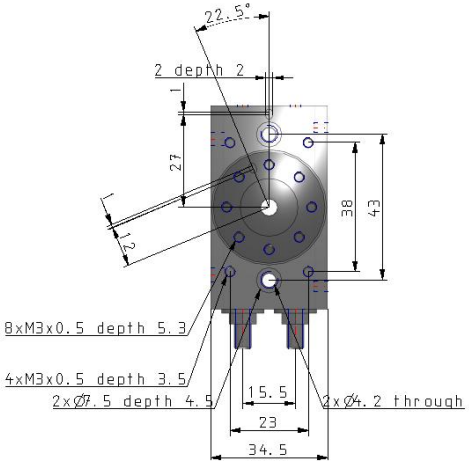

Specifications are subject to change without prior notice and any obligation on the part of the manufacturer.

SMC United Kingdom +34 945184126 sales@smc.uk

Constructions

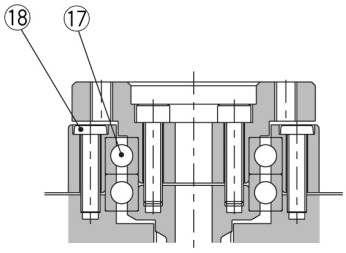

MSQA□A
(High precision type)

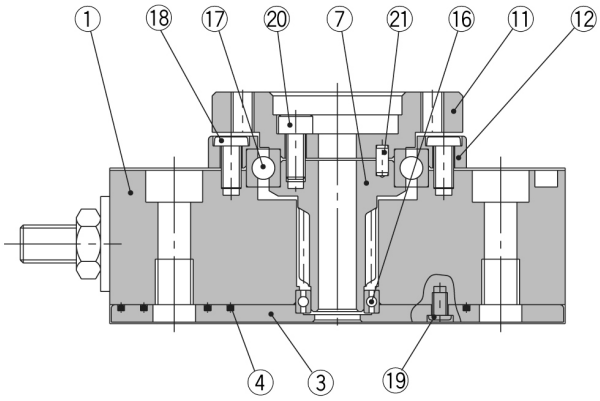

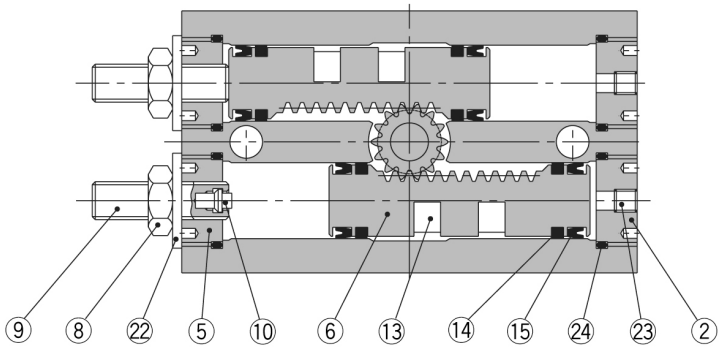

Component parts

No.	Description		Material
1	**Body**		Aluminium alloy
2	**Cover**		Aluminium alloy
3	**Plate**		Aluminium alloy
4	**Seal**		NBR
5	**End cover**		Aluminium alloy
6	**Piston**		Stainless steel
7	**Pinion**		Chrome molybdenum steel
8	**Hexagon nut**		Steel wire
9	**Adjustment bolt**		Steel wire
10	**Cushion pad**	**Size: 3, 7**	Rubber material
11	**Table**		Aluminium alloy
12	**Bearing retainer**		Aluminium alloy
13	**Magnet**		Magnetic material
14	**Wear ring**		Resin

No.	Description			Material
15	**Piston seal**			NBR
16	**Deep groove ball bearing**			Bearing steel
17	**Basic type**	**Deep groove ball bearing**		Bearing steel
	High precision type	**Special bearing**		
18	**Round head Philips screw No.0**	**Basic type**	**Size: 1 to 3**	Steel wire
	Round head Philips screw		**Size: 7**	
	Round head Philips screw	**High precision type**		
19	**Round head Philips screw No.0**			Steel wire
20	**Hexagon socket head set bolt**			Stainless steel
21	**Parallel pin**			Carbon steel
22	**Seal washer**			NBR
23	**Hexagon socket head set screw**			Stainless steel
24	**O-ring**			NBR

*23 The hexagon socket head set screws are tightened at different positions depending on the position of the connecting port.

Specifications are subject to change without prior notice and any obligation on the part of the manufacturer.

SMC United Kingdom +34 945184126 sales@smc.uk

Additional information

Catalogue	MSQ_EU.pdf
Operation manuals	OM_MSQ_OM0002EN-B.pdf

Specifications are subject to change without prior notice and any obligation on the part of the manufacturer.

SMC United Kingdom +34 945184126 sales@smc.uk