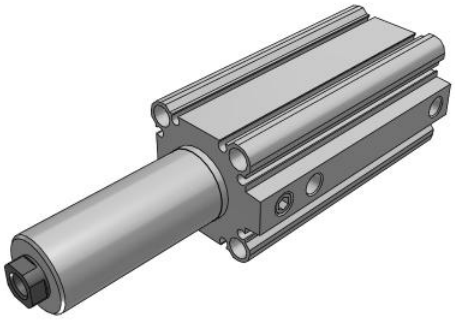

MK-Z Rotary Clamp Cylinder, Standard w/Auto Switch Mounting Grooves

MKB40TF-50LZ

Datasheet

General series information

- Length has been reduced in comparison to MK2 and is similar in length to MK.
- Bore sizes (mm): 12, 16, 20, 25, 32, 40, 50, 63
- Compact auto switch D-M9 can be mounted on 4 sides.
- Magnetic field resistant auto switch can be used.
- 2 types of cylinder mounting are available with one body.

Double-acting, single-rod cylinder

Standard specifications

Mounting	B (Through-hole/Both Ends Tapped Common, Basic)
Bore Size	Ø40 mm
Lead Wire or Prewired Connector	0.5m [Or None in the Case of No Switch]
Number	2 pcs. [Or None in the Case of No Switch]
Rotary Direction	L (Counterclockwise)
Port Thread	TF (G)
Clamp Stroke	50 mm
Auto Switch	No Switch
Body Option	Standard (Female Thread)
Made to Order	None
Pressure medium	Air
Maximum temperature of pressure medium	70 ºC
Maximum temperature of pressure medium with magnet	60 ºC
Minimum temperature of pressure medium	-10 ºC (No freezing)
Minimum temperature of pressure medium with magnet	-10 ºC (No freezing)
Maximum operating pressure	1.0 MPa
Minimum operating pressure	0.1 MPa
Proof pressure	1.5 MPa

Specifications are subject to change without prior notice and any obligation on the part of the manufacturer.

SMC United Kingdom +34 945184126 sales@smc.uk

Maximum ambient temperature	70 ºC
Maximum ambient temperature with magnet	60 ºC
Minimum ambient temperature	-10 ºC (No freezing)
Minimum ambient temperature with magnet	-10 ºC (No freezing)
Number of pneumatic connections	2 pcs.
Pneumatic input connection	G 1/8
Pneumatic exhaust connection	G 1/8
Mode of operation of drive	Double acting
Theoretical cylinder force, advance stroke (at 0.5 MPa)	628 N
Theoretical cylinder force, return stroke (at 0.5 MPa)	528 N
Maximum piston speed	200 mm/s
Type of cushioning	Rubber bumper
Piston rod end	Female thread
Female thread of rod end	M10
Weight	0.728 Kg

Specifications are subject to change without prior notice and any obligation on the part of the manufacturer.

SMC United Kingdom +34 945184126 sales@smc.uk

Dimensions

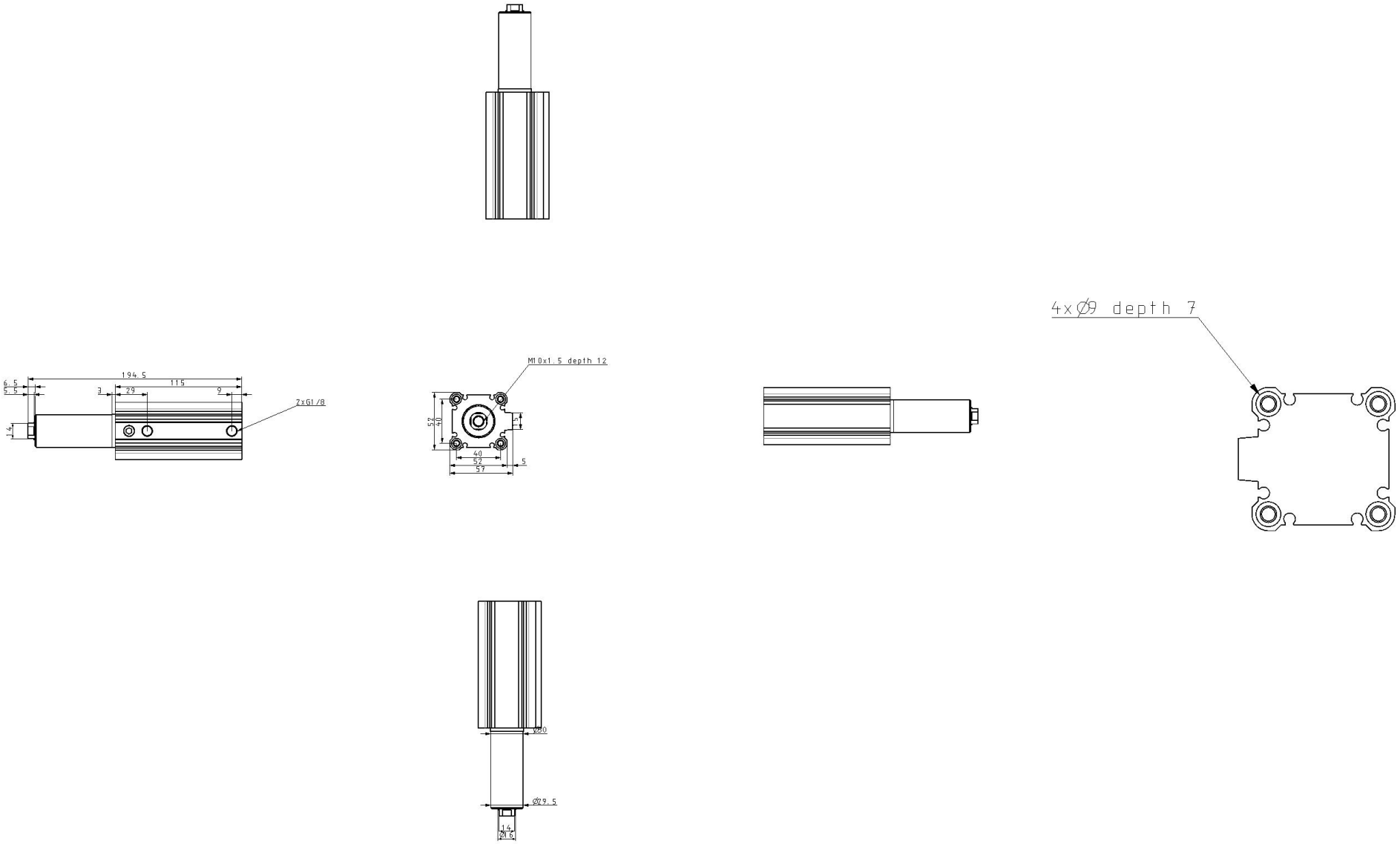

Specifications are subject to change without prior notice and any obligation on the part of the manufacturer.

Constructions

With arm (N)

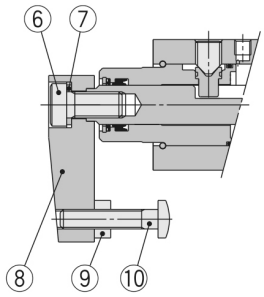

New MK40 to 63

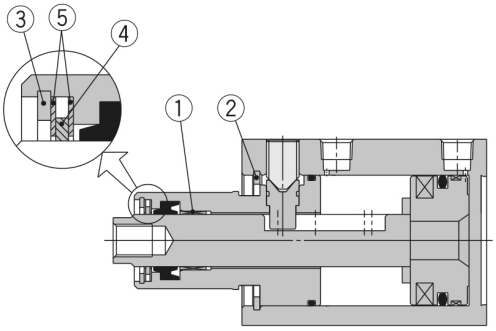

Head flange (G)

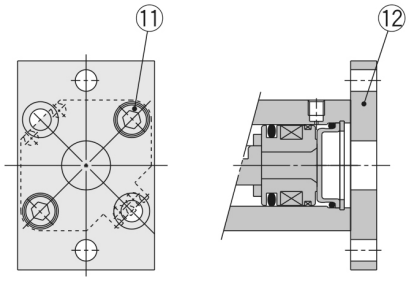

Component Parts

No.	Description	Material	Note
1	**Bushing**	Copper bearing material	
2	**Round R-type retaining ring**	Carbon tool steel	
3	**Round R-type retaining ring**	Carbon tool steel	
4	**Coil scraper**	Phosphor bronze	
5	**Scraper pressure**	Stainless steel	
6	**Hexagon socket head cap screw**	Chromium molybdenum steel	
7	**Spring washer**	Hard steel	
8	**Arm**	Rolled steel	
9	**Hexagon nut**	Rolled steel	
10	**Clamp bolt**	Chromium molybdenum steel	
11	**Hexagon socket head cap screw**	Chromium molybdenum steel	ø40: 4 pcs.
12	**Flange**	Rolled steel	

Specifications are subject to change without prior notice and any obligation on the part of the manufacturer.

SMC United Kingdom +34 945184126 sales@smc.uk

Additional information

Catalogue	MK-A_EU.pdf

Specifications are subject to change without prior notice and any obligation on the part of the manufacturer.

SMC United Kingdom +34 945184126 sales@smc.uk