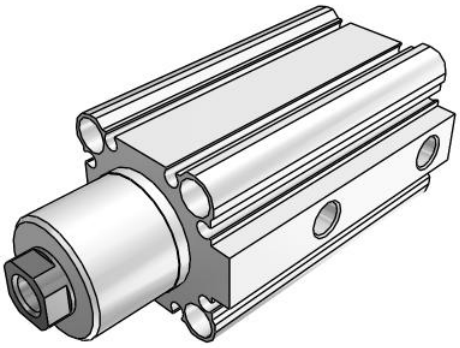

# MK-Z Rotary Clamp Cylinder, Standard w/Auto Switch Mounting Grooves

MKB32TF-10RZ

Datasheet

## General series information

- Length has been reduced in comparison to MK2 and is similar in length to MK.
- Bore sizes (mm): 12, 16, 20, 25, 32, 40, 50, 63
- Compact auto switch D-M9 can be mounted on 4 sides.
- Magnetic field resistant auto switch can be used.
- 2 types of cylinder mounting are available with one body.

*Double-acting, single-rod cylinder*

## Standard specifications

| | |
|---|---|
| Mounting | B (Through-hole/Both Ends Tapped Common, Basic) |
| Bore Size | Ø32 mm |
| Lead Wire or Prewired Connector | 0.5m [Or None in the Case of No Switch] |
| Number | 2 pcs. [Or None in the Case of No Switch) |
| Rotary Direction | R (Clockwise) |
| Port Thread | TF (G) |
| Clamp Stroke | 10 mm |
| Auto Switch | No Switch |
| Body Option | Standard (Female Thread) |
| Made to Order | None |
| Pressure medium | Air |
| Maximum temperature of pressure medium | 70 ºC |
| Maximum temperature of pressure medium with magnet | 60 ºC |
| Minimum temperature of pressure medium | -10 ºC (No freezing) |
| Minimum temperature of pressure medium with magnet | -10 ºC (No freezing) |
| Maximum operating pressure | 1.0 MPa |
| Minimum operating pressure | 0.1 MPa |
| Proof pressure | 1.5 MPa |

*Specifications are subject to change without prior notice and any obligation on the part of the manufacturer.*



SMC United Kingdom +34 945184126 sales@smc.uk

| | |
|---|---|
| Maximum ambient temperature | 70 ºC |
| Maximum ambient temperature with magnet | 60 ºC |
| Minimum ambient temperature | -10 ºC (No freezing) |
| Minimum ambient temperature with magnet | -10 ºC (No freezing) |
| Number of pneumatic connections | 2 pcs. |
| Pneumatic input connection | G 1/8 |
| Pneumatic exhaust connection | G 1/8 |
| Mode of operation of drive | Double acting |
| Theoretical cylinder force, advance stroke (at 0.5 MPa) | 402 N |
| Theoretical cylinder force, return stroke (at 0.5 MPa) | 302 N |
| Maximum piston speed | 200 mm/s |
| Type of cushioning | Rubber bumper |
| Piston rod end | Female thread |
| Female thread of rod end | M10 |
| Weight | 0.445 Kg |

Specifications are subject to change without prior notice and any obligation on the part of the manufacturer.



SMC United Kingdom +34 945184126 sales@smc.uk

# Dimensions

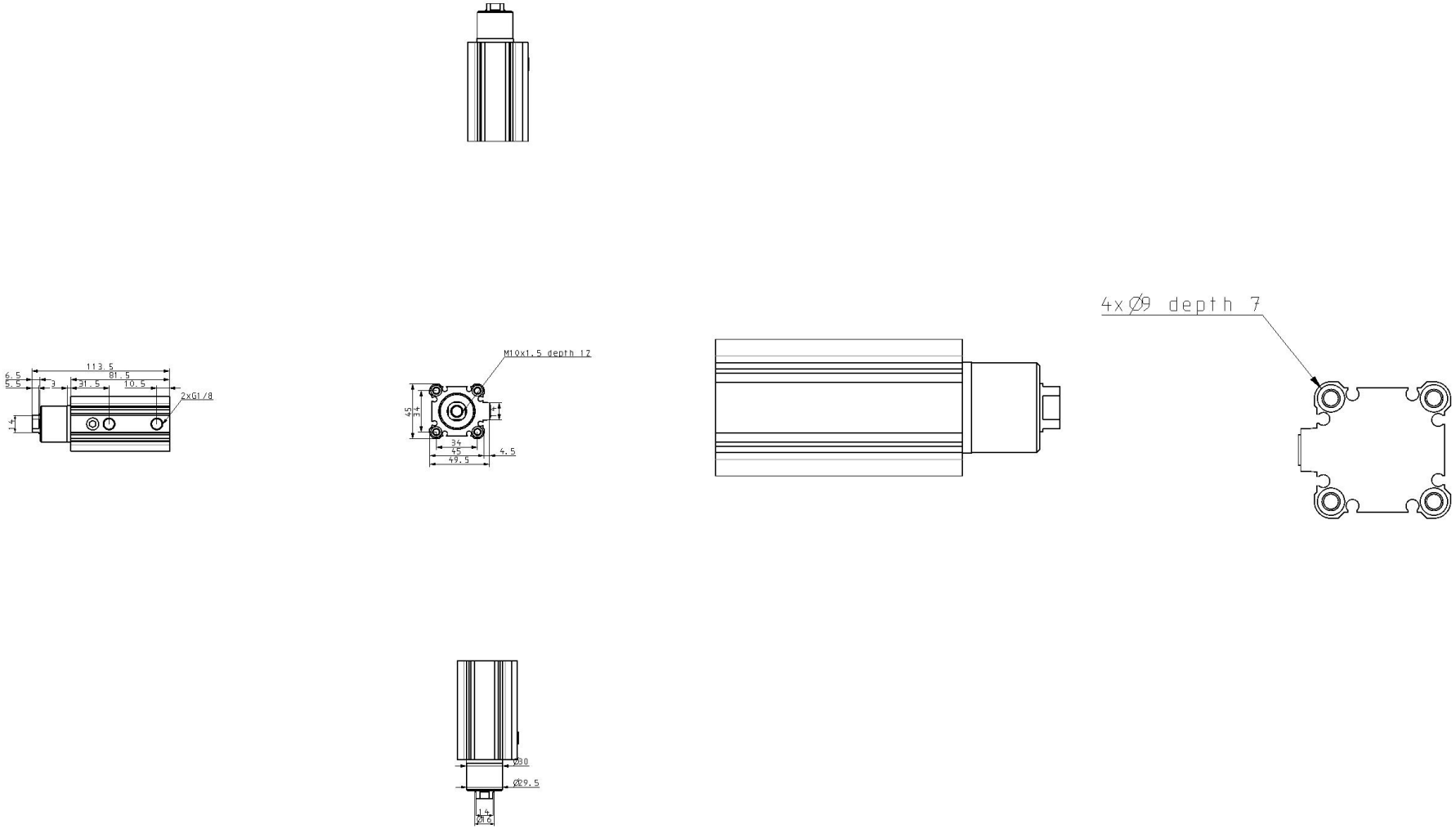


Specifications are subject to change without prior notice and any obligation on the part of the manufacturer.



SMC United Kingdom +34 945184126 sales@smc.uk

# Constructions

## New MK20 to 32

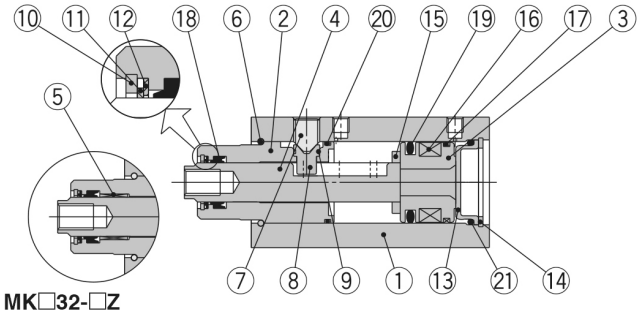


## With arm (N)

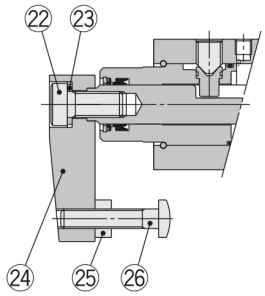


## Head flange (G)

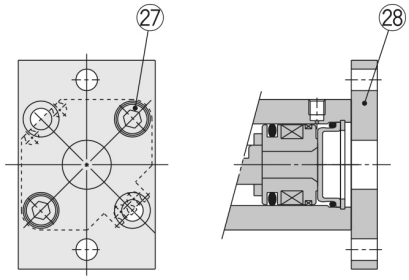


## Component Parts

| No. | Description | Material | Note | |
|---|---|---|---|---|
| 1 | **Cylinder tube** | Aluminum alloy | Hard anodised | |
| 2 | **Rod cover** | Aluminum alloy | Hard anodised | |
| 3 | **Piston** | Aluminum alloy | Chromated | |
| 4 | **Piston rod** | Stainless steel | ø20 to ø25 Nitriding | |
| | | Carbon steel | ø32 Heated, Nickel plated | |
| 5 | **Bushing** | Copper bearing material | ø32 only | |
| 6 | **Stop ring** | Stainless steel | | |
| 7 | **Hexagon socket head set screw** | Chromium molybdenum steel | Sharp end section: 90° | |
| 8 | **Guide pin** | Stainless steel | Nitriding | |
| 9 | **O-ring** | NBR | | |
| 10 | **Round R-type retaining ring** | Carbon tool steel | | |
| 11 | **Coil scraper** | Phosphor bronze | | |
| 12 | **Scraper pressure** | Stainless steel | | |
| 13 | **Head cover** | Rolled steel | Electroless nickel plated | |
| 14 | **C-type retaining ring** | Carbon tool steel | | |
| 15 | **Bumper** | Urethane | | |
| 16 | **Magnet** | — | | |
| 17 | **Wear ring** | Resin | | |
| 18 | **Rod seal** | NBR | | |
| 19 | **Piston seal** | NBR | | |
| 20 | **Gasket** | NBR | | |
| 21 | **O-ring** | NBR | | |
| 22 | **Hexagon socket head cap screw** | Chromium molybdenum steel | | |
| 23 | **Spring washer** | Hard steel | | |
| 24 | **Arm** | Rolled steel | | |
| 25 | **Hexagon nut** | Rolled steel | | |
| 26 | **Clamp bolt** | Chromium molybdenum steel | | |
| 27 | **Hexagon socket head cap screw** | Chromium molybdenum steel | Qty. | ø20, ø25: 2 pcs. |
| | | | | ø32: 4 pcs. |
| 28 | **Flange** | Rolled steel | | |

*Specifications are subject to change without prior notice and any obligation on the part of the manufacturer.*



SMC United Kingdom +34 945184126 sales@smc.uk

## Additional information

| | |
|---|---|
| Catalogue | MK-A_EU.pdf |

Specifications are subject to change without prior notice and any obligation on the part of the manufacturer.



SMC United Kingdom +34 945184126 sales@smc.uk