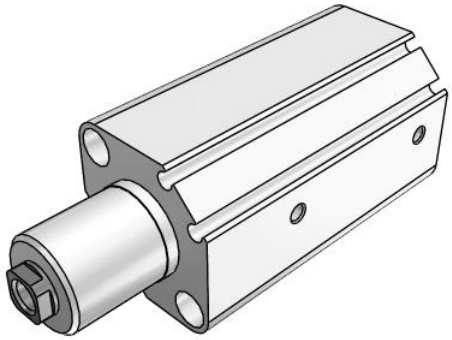

MK-Z Rotary Clamp Cylinder, Standard w/Auto Switch Mounting Grooves

MKB25-20LZ

Datasheet

General series information

- Length has been reduced in comparison to MK2 and is similar in length to MK.
- Bore sizes (mm): 12, 16, 20, 25, 32, 40, 50, 63
- Compact auto switch D-M9 can be mounted on 4 sides.
- Magnetic field resistant auto switch can be used.
- 2 types of cylinder mounting are available with one body.

Double-acting, single-rod cylinder

Standard specifications

Mounting	B (Through Hole/Both Ends Tapped Common (Standard)]
Bore Size	Ø25 mm
Number	2 pcs. (Or None in the Case of No Switch)
Rotary Direction	L (Counterclockwise)
Port Thread	M thread: Ø12 to Ø25, Rc: Ø32 to Ø63
Lead Wire or Pre-wired Connector	0.5 m (Or None in the Case of No Switch)
Clamp Stroke	20 mm
Auto Switch	No Switch
Body Option	Standard (Female Thread)
Made to Order	None
Pressure medium	Air
Maximum temperature of pressure medium	70 ºC
Maximum temperature of pressure medium with magnet	60 ºC
Minimum temperature of pressure medium	-10 ºC (No freezing)
Minimum temperature of pressure medium with magnet	-10 ºC (No freezing)
Maximum operating pressure	1.0 MPa
Minimum operating pressure	0.1 MPa
Proof pressure	1.5 MPa

Specifications are subject to change without prior notice and any obligation on the part of the manufacturer.

SMC United Kingdom +34 945184126 sales@smc.uk

Maximum ambient temperature	70 ºC
Maximum ambient temperature with magnet	60 ºC
Minimum ambient temperature	-10 ºC (No freezing)
Minimum ambient temperature with magnet	-10 ºC (No freezing)
Number of pneumatic connections	2 pcs.
Pneumatic input connection	M5
Pneumatic exhaust connection	M5
Mode of operation of drive	Double acting
Theoretical cylinder force, advance stroke (at 0.5 MPa)	245 N
Theoretical cylinder force, return stroke (at 0.5 MPa)	189 N
Maximum piston speed	200 mm/s
Type of cushioning	Rubber bumper
Piston rod end	Female thread
Female thread of rod end	M8
Weight	0.319 Kg

Specifications are subject to change without prior notice and any obligation on the part of the manufacturer.

SMC United Kingdom +34 945184126 sales@smc.uk

Dimensions

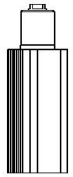

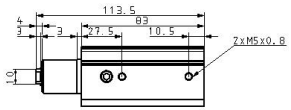

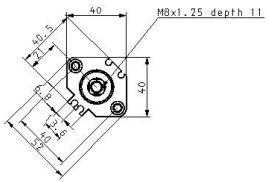

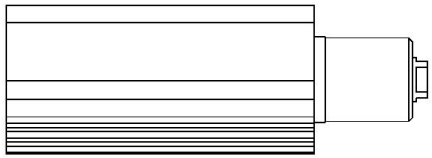

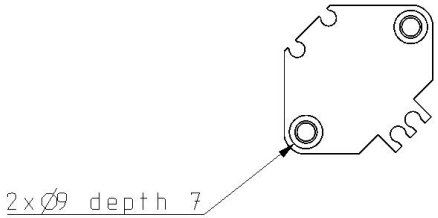

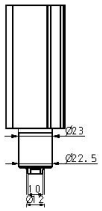

Specifications are subject to change without prior notice and any obligation on the part of the manufacturer.

SMC United Kingdom +34 945184126 sales@smc.uk

Constructions

New MK20 to 32

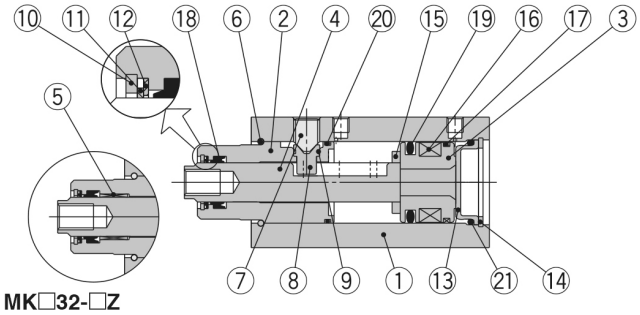

With arm (N)

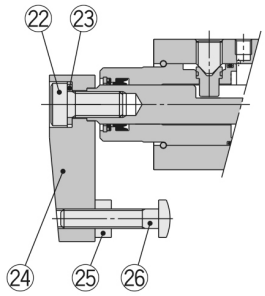

Head flange (G)

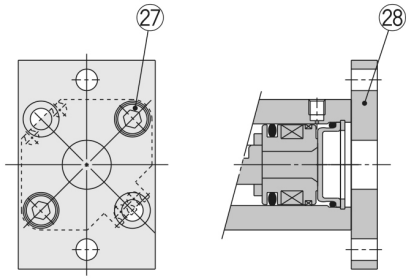

Component Parts

No.	Description	Material	Note	
1	**Cylinder tube**	Aluminum alloy	Hard anodised	
2	**Rod cover**	Aluminum alloy	Hard anodised	
3	**Piston**	Aluminum alloy	Chromated	
4	**Piston rod**	Stainless steel	ø20 to ø25 Nitriding	
		Carbon steel	ø32 Heated, Nickel plated	
5	**Bushing**	Copper bearing material	ø32 only	
6	**Stop ring**	Stainless steel		
7	**Hexagon socket head set screw**	Chromium molybdenum steel	Sharp end section: 90°	
8	**Guide pin**	Stainless steel	Nitriding	
9	**O-ring**	NBR		
10	**Round R-type retaining ring**	Carbon tool steel		
11	**Coil scraper**	Phosphor bronze		
12	**Scraper pressure**	Stainless steel		
13	**Head cover**	Rolled steel	Electroless nickel plated	
14	**C-type retaining ring**	Carbon tool steel		
15	**Bumper**	Urethane		
16	**Magnet**	—		
17	**Wear ring**	Resin		
18	**Rod seal**	NBR		
19	**Piston seal**	NBR		
20	**Gasket**	NBR		
21	**O-ring**	NBR		
22	**Hexagon socket head cap screw**	Chromium molybdenum steel		
23	**Spring washer**	Hard steel		
24	**Arm**	Rolled steel		
25	**Hexagon nut**	Rolled steel		
26	**Clamp bolt**	Chromium molybdenum steel		
27	**Hexagon socket head cap screw**	Chromium molybdenum steel	Qty.	ø20, ø25: 2 pcs.
				ø32: 4 pcs.
28	**Flange**	Rolled steel		

Specifications are subject to change without prior notice and any obligation on the part of the manufacturer.

SMC United Kingdom +34 945184126 sales@smc.uk

Additional information

Catalogue	MK-A_EU.pdf

Specifications are subject to change without prior notice and any obligation on the part of the manufacturer.

SMC United Kingdom +34 945184126 sales@smc.uk