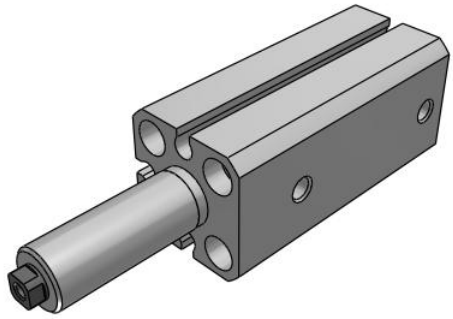

MK-Z Rotary Clamp Cylinder, Standard w/Auto Switch Mounting Grooves

MKB12-20RZ

Datasheet

General series information

- Length has been reduced in comparison to MK2 and is similar in length to MK.
- Bore sizes (mm): 12, 16, 20, 25, 32, 40, 50, 63
- Compact auto switch D-M9 can be mounted on 4 sides.
- Magnetic field resistant auto switch can be used.
- 2 types of cylinder mounting are available with one body.

Double-acting, single-rod cylinder

Standard specifications

Mounting	B (Through Hole/Both Ends Tapped Common (Standard)]
Bore Size	Ø12 mm
Number	2 pcs. (Or None in the Case of No Switch)
Rotary Direction	R (Clockwise)
Port Thread	M thread: Ø12 to Ø25, Rc: Ø32 to Ø63
Lead Wire or Pre-wired Connector	0.5 m (Or None in the Case of No Switch)
Clamp Stroke	20 mm
Auto Switch	No Switch
Body Option	Standard (Female Thread)
Made to Order	None
Pressure medium	Air
Maximum temperature of pressure medium	70 ºC
Maximum temperature of pressure medium with magnet	60 ºC
Minimum temperature of pressure medium	-10 ºC (No freezing)
Minimum temperature of pressure medium with magnet	-10 ºC (No freezing)
Maximum operating pressure	1.0 MPa
Minimum operating pressure	0.1 MPa
Proof pressure	1.5 MPa

Specifications are subject to change without prior notice and any obligation on the part of the manufacturer.

SMC United Kingdom +34 945184126 sales@smc.uk

Maximum ambient temperature	70 ºC
Maximum ambient temperature with magnet	60 ºC
Minimum ambient temperature	-10 ºC (No freezing)
Minimum ambient temperature with magnet	-10 ºC (No freezing)
Number of pneumatic connections	2 pcs.
Pneumatic input connection	M5
Pneumatic exhaust connection	M5
Mode of operation of drive	Double acting
Theoretical cylinder force, advance stroke (at 0.5 MPa)	57 N
Theoretical cylinder force, return stroke (at 0.5 MPa)	42 N
Maximum piston speed	200 mm/s
Type of cushioning	Rubber bumper
Piston rod end	Female thread
Female thread of rod end	M3
Weight	0.084 Kg

Specifications are subject to change without prior notice and any obligation on the part of the manufacturer.

SMC United Kingdom +34 945184126 sales@smc.uk

Dimensions

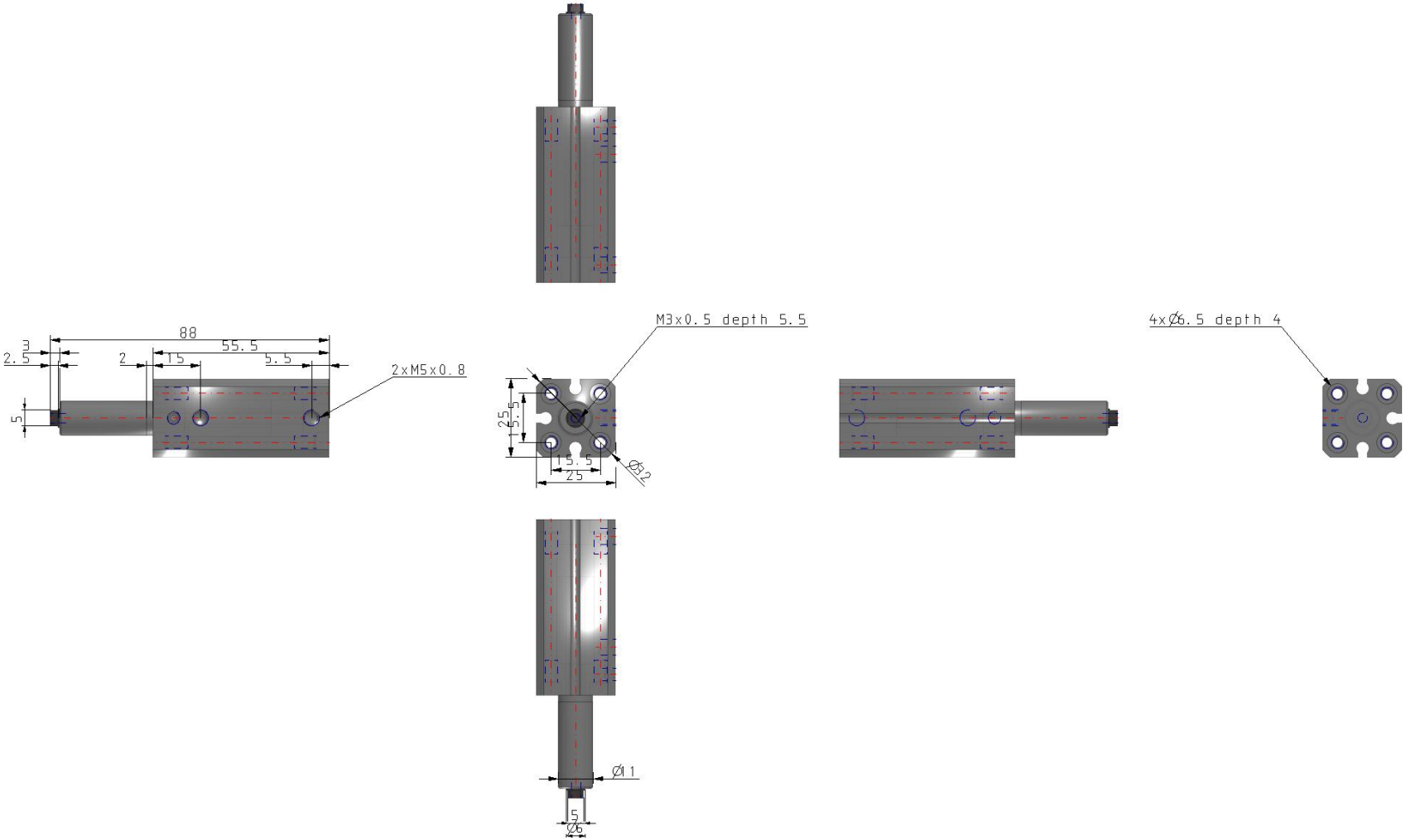

Specifications are subject to change without prior notice and any obligation on the part of the manufacturer.

Constructions

New MK12, 16

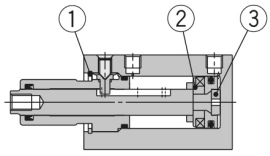

With arm (N)

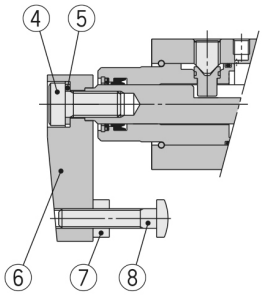

Head flange (G)

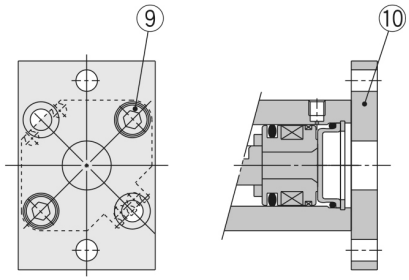

Component Parts

No.	Description	Material	Note
1	**Round R-type retaining ring**	Carbon tool steel	
2	**Magnet holder**	Aluminum alloy	Chromated
3	**Bumper B**	Urethane	
4	**Hexagon socket head cap screw**	Chromium molybdenum steel	
5	**Spring washer**	Hard steel	
6	**Arm**	Rolled steel	
7	**Hexagon nut**	Rolled steel	
8	**Clamp bolt**	Chromium molybdenum steel	
9	**Hexagon socket head cap screw**	Chromium molybdenum steel	4 pcs.
10	**Flange**	Rolled steel	

Specifications are subject to change without prior notice and any obligation on the part of the manufacturer.

SMC United Kingdom +34 945184126 sales@smc.uk

Additional information

Catalogue	MK-A_EU.pdf

Specifications are subject to change without prior notice and any obligation on the part of the manufacturer.

SMC United Kingdom +34 945184126 sales@smc.uk